Curs 7

2018/2019

Dispozitive şi circuite de microunde pentru radiocomunicații

Disciplina 2018/2019

- 2C/1L, **DCMR (CDM)**
- **Minim 7 prezente (curs+laborator)**
- Curs - **conf. Radu Damian**
  - Vineri 11-13, P7
  - E – 50% din nota
  - **probleme** + (2p prez. curs) + (3 teste) + (bonus activitate)
    - 3pz=+0.5p
  - **toate materialele permise**
- Laborator – **conf. Radu Damian**
  - Joi 8-14 impar II.13
  - L – 25% din nota
  - P – 25% din nota

Documentatie

- http://rf-opto.etti.tuiasi.ro

Examen: Reprezentare logaritmică

$dB = 10 \cdot \log_{10} (P_2 / P_1)$

0 dB	= 1
+ 0.1 dB	= 1.023 (+2.3%)
+ 3 dB	= 2
+ 5 dB	= 3
+ 10 dB	= 10
-3 dB	= 0.5
-10 dB	= 0.1
-20 dB	= 0.01
-30 dB	= 0.001

$dBm = 10 \cdot \log_{10} (P / 1\ mW)$

0 dBm	= 1 mW
3 dBm	= 2 mW
5 dBm	= 3 mW
10 dBm	= 10 mW
20 dBm	= 100 mW
-3 dBm	= 0.5 mW
-10 dBm	= 100 μW
-30 dBm	= 1 μW
-60 dBm	= 1 nW

[dBm] + [dB] = [dBm]

[dBm/Hz] + [dB] = [dBm/Hz]

[x] + [dB] = [x]

Examen

- Operatii cu numere complexe!
- $z = a + j \cdot b$; $\mathbf{j^2 = -1}$

Adaptarea de impedanța

Adaptare dpdv al puterii

$$\boxed{Z_L = Z_i^*}$$

Daca se alege un Zo real

$$\Gamma = \frac{Z - Z_0}{Z + Z_0}$$

$$\boxed{\Gamma_L = \Gamma_i^*}$$

- numere complexe
- in planul complex

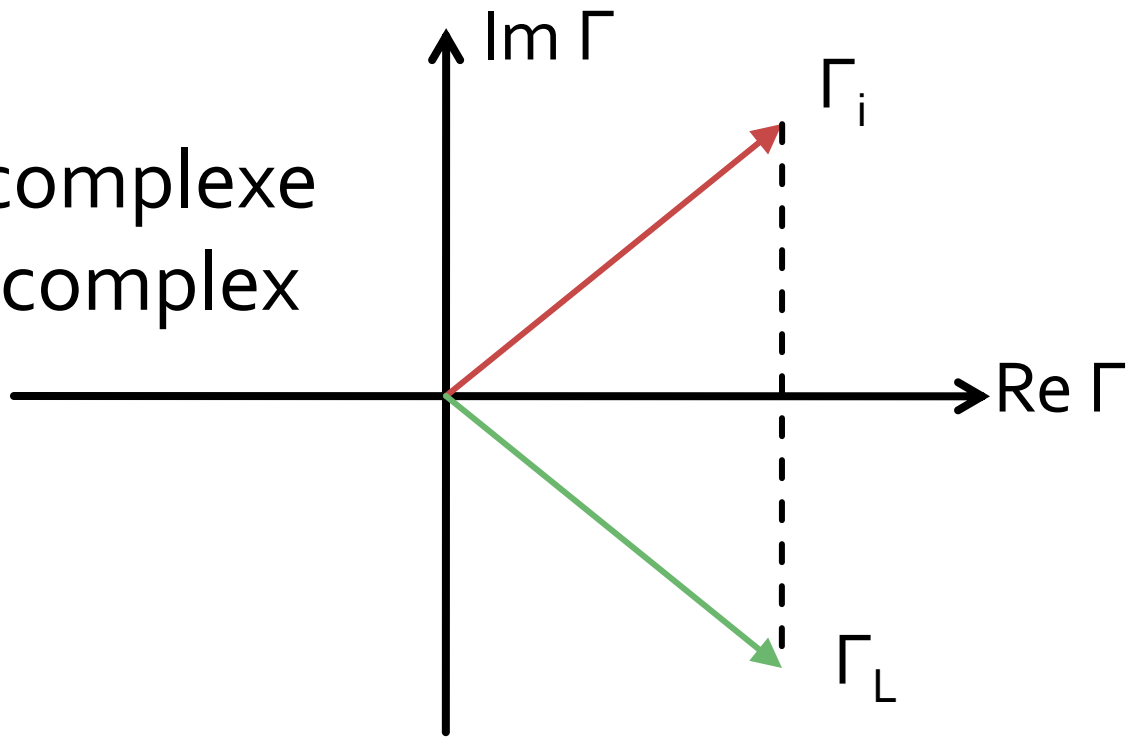

Reflexie de putere / Model

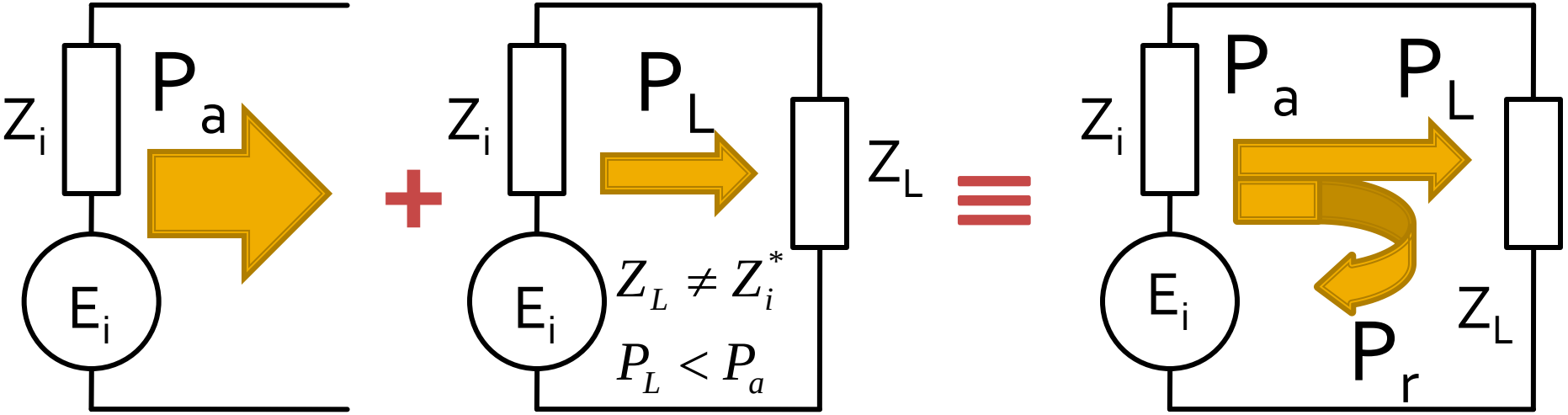

- Generatorul are posibilitatea de a oferi o anumita putere maxima de semnal P_a
- Pentru o sarcina oarecare, acesteia i se ofera o putere de semnal mai mica $P_L < P_a$
- Se intampla **"ca si cum"** (model) o parte din putere se reflecta $P_r = P_a - P_L$
- Puterea este o marime **scalara!**

Analiza la nivel de rețea a circuitelor de microunde

Matricea S (repartitie)

- Scattering parameters

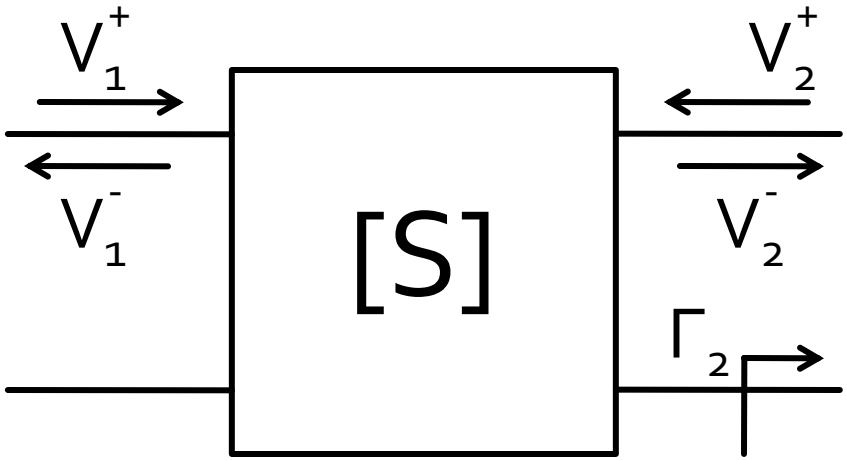

$$\begin{bmatrix} V_1^- \\ V_2^- \end{bmatrix} = \begin{bmatrix} S_{11} & S_{12} \\ S_{21} & S_{22} \end{bmatrix} \cdot \begin{bmatrix} V_1^+ \\ V_2^+ \end{bmatrix}$$

$$S_{11} = \left.\frac{V_1^-}{V_1^+}\right|_{V_2^+=0} \qquad S_{21} = \left.\frac{V_2^-}{V_1^+}\right|_{V_2^+=0}$$

- $V_2^+ = 0$ are semnificatia: la portul 2 este conectata impedanta care realizeaza conditia de adaptare (complex conjugat)

$$\Gamma_2 = 0 \rightarrow V_2^+ = 0$$

Matricea S (repartitie)

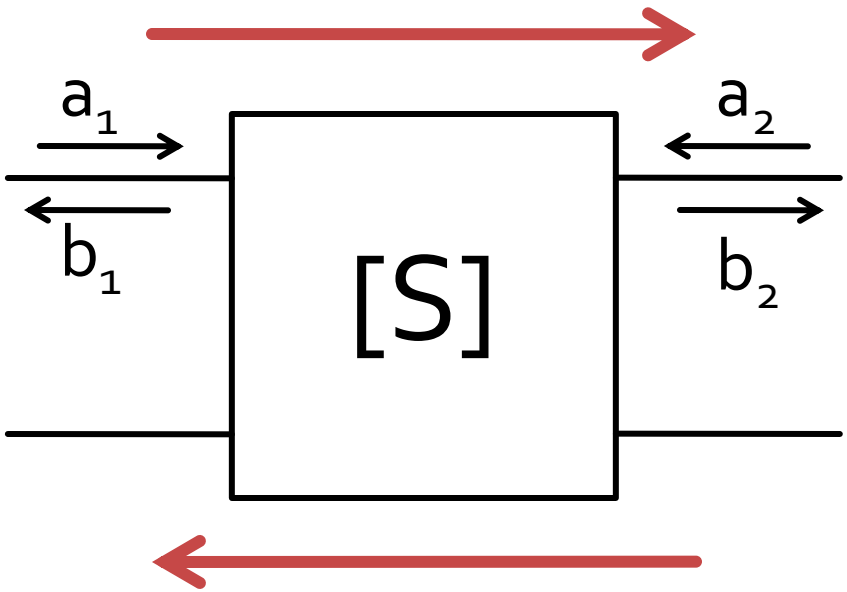

$$\begin{bmatrix} b_1 \\ b_2 \end{bmatrix} = \begin{bmatrix} S_{11} & S_{12} \\ S_{21} & S_{22} \end{bmatrix} \cdot \begin{bmatrix} a_1 \\ a_2 \end{bmatrix}$$

$$|S_{21}|^2 = \frac{Putere\ sarcina\ Z_0}{Putere\ sursa\ Z_0}$$

- a,b
  - informatia despre putere **SI** faza
- S_{ij}
  - influenta circuitului asupra puterii semnalului incluzand informatiile relativ la faza

Adaptarea de impedanța

Diagrama Smith

Diagrama Smith

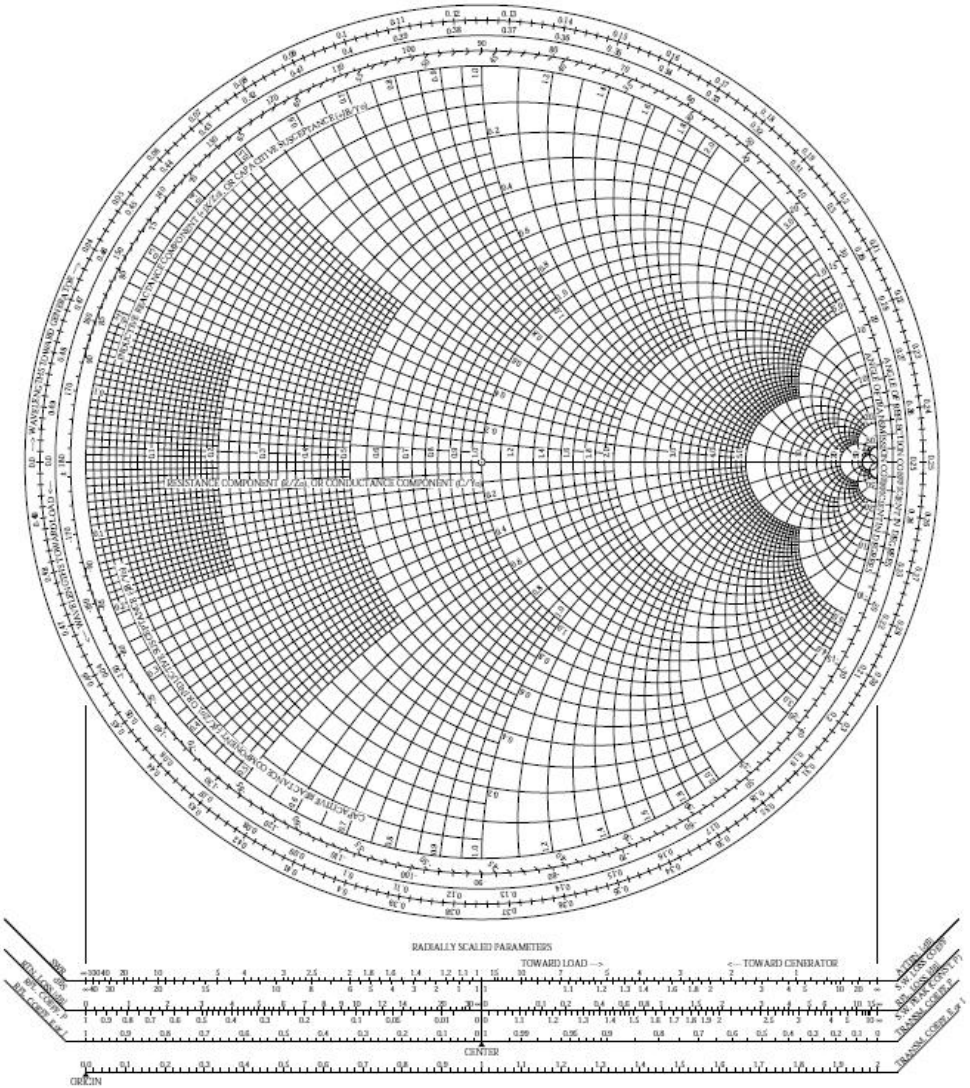

Diagrama Smith

$$\Gamma = \frac{Z_L - Z_0}{Z_L + Z_0} = \frac{z_L - 1}{z_L + 1}$$

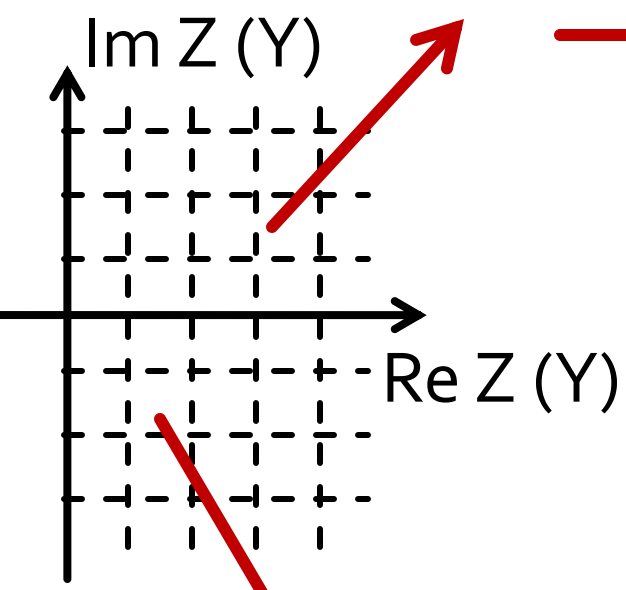

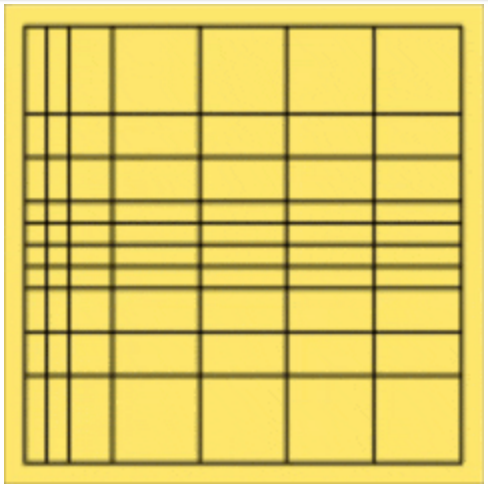

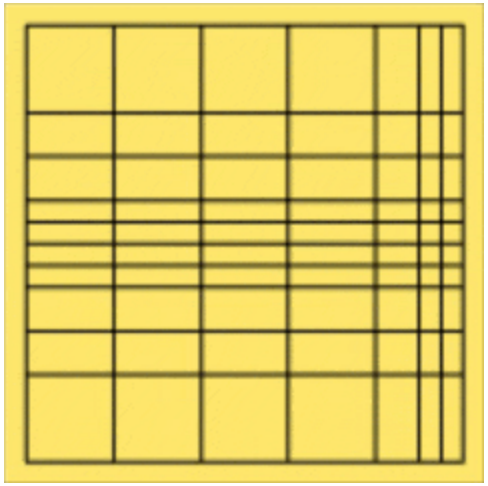

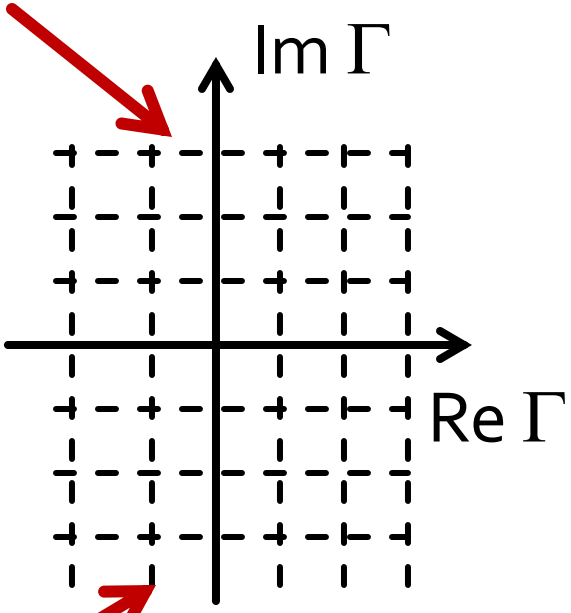

$$\Gamma = \frac{Z_L - Z_0}{Z_L + Z_0} = \frac{Y_0 - Y_L}{Y_0 + Y_L} = \frac{1 - y_L}{1 + y_L}$$

Diagrama Smith

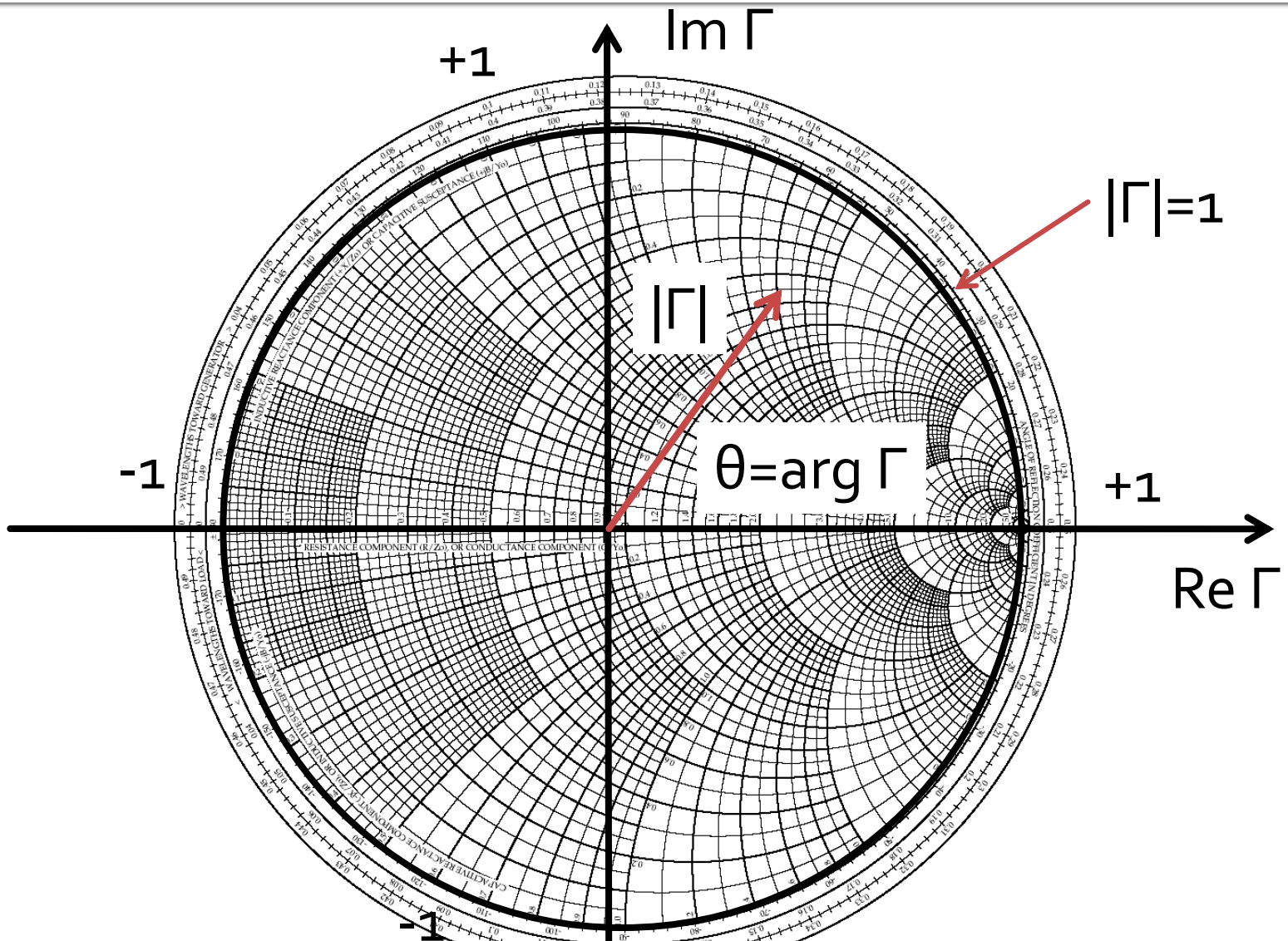

Diagrama Smith

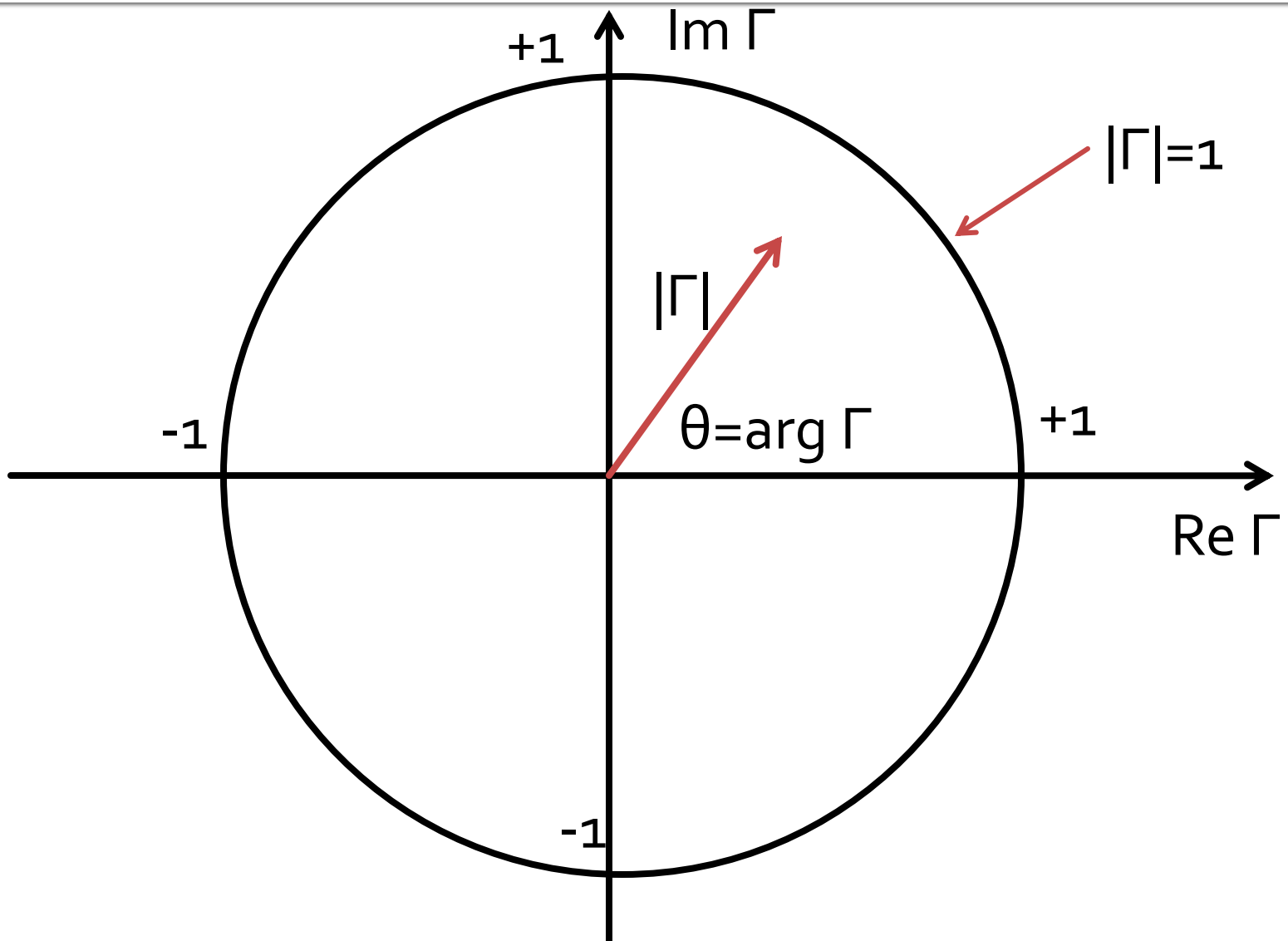

Adaptarea cu elemente concentrate (Retele in L)

Adaptarea de impedanța

Diagrama Smith, adaptare

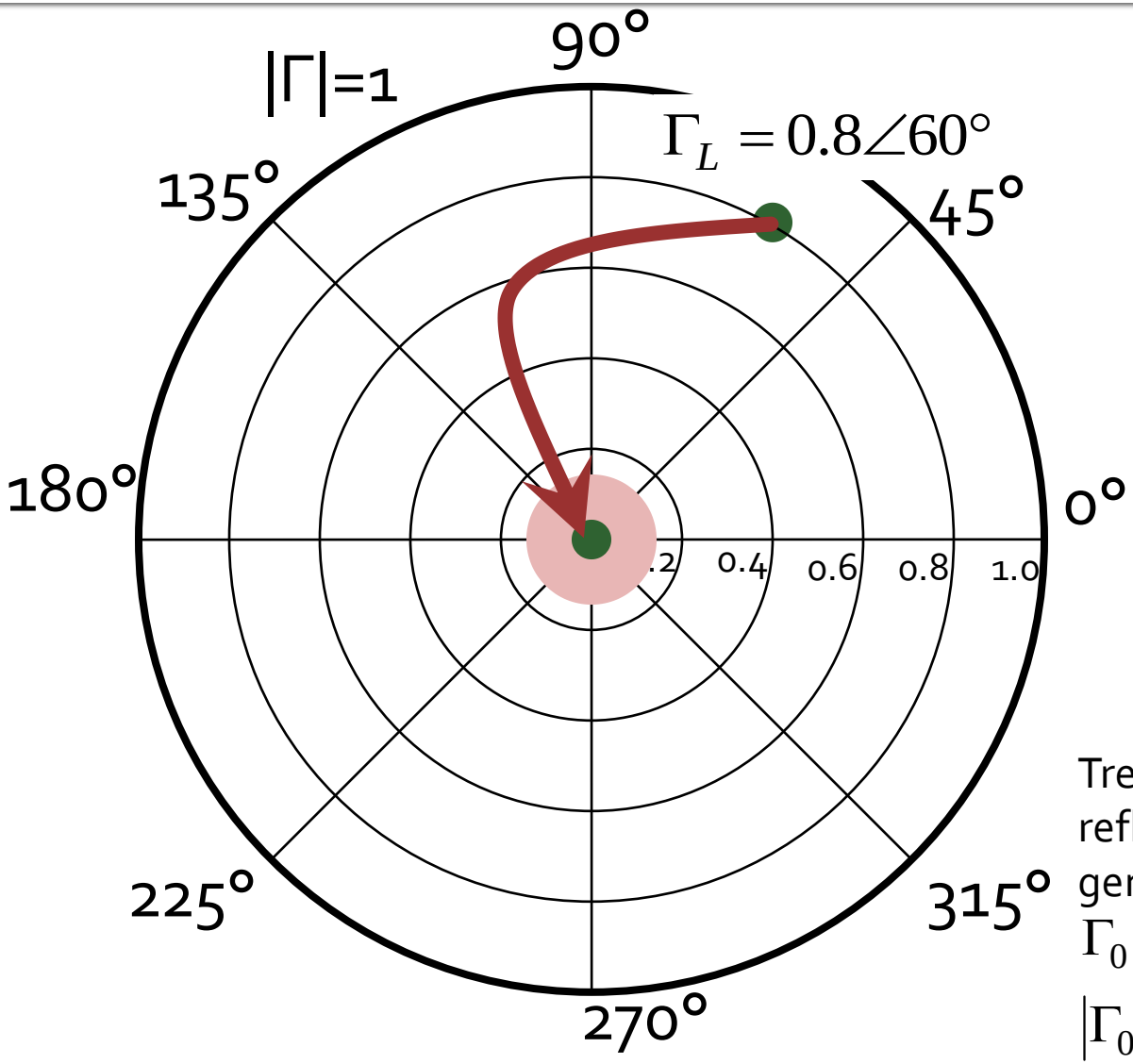

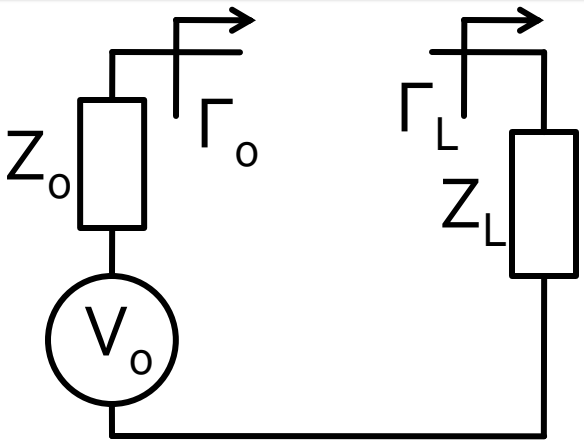

Adaptare Z_L la Z_0. Se raporteaza Z_L la Z_0

$$Z_L = 21.429\Omega + j \cdot 82.479\Omega$$

$$z_L = 0.429 + j \cdot 1.65$$

$$\Gamma_L = 0.8\angle 60°$$

Trebuie sa deplasez coeficientul de reflexie in zona in care pentru generator cu Z_0 am:

$\Gamma_0 = 0$ adaptare perfecta

$|\Gamma_0| \le \Gamma_m$ adaptare "suficienta"

Adaptare, reactanta in serie

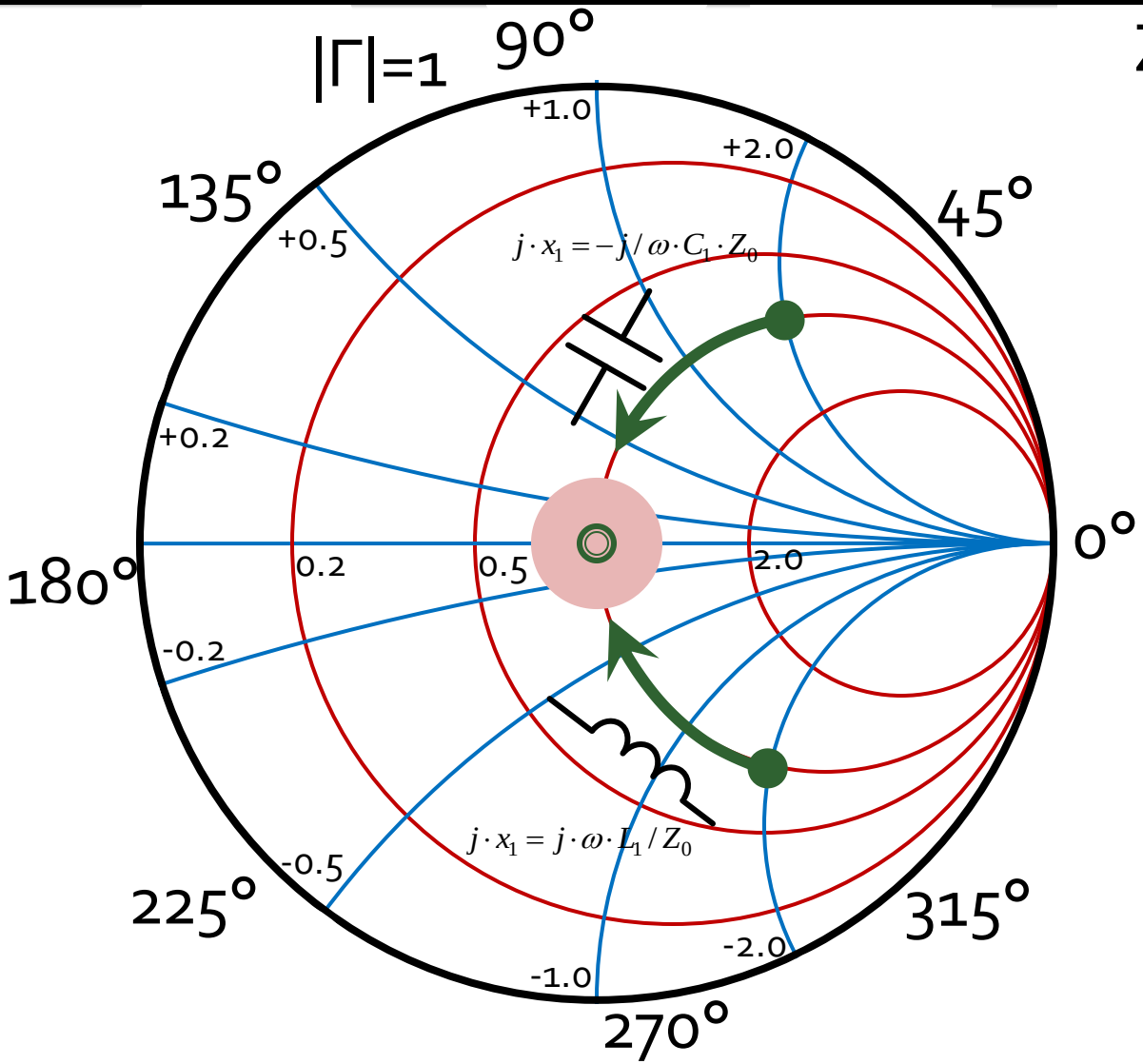

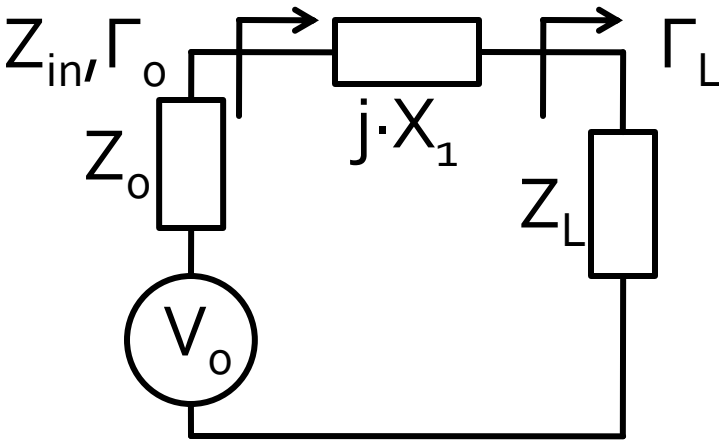

$$z_L = r_L + j \cdot x_L$$

$$z_{in} = r_L + j \cdot (x_L + x_1)$$

$$\boxed{r_{in} = r_L}$$

- Adaptarea se poate realiza **numai daca** $r_L = 1$
- se realizeaza compensarea partii reactive a sarcinii

$$j \cdot x_1 = -j \cdot x_L$$

Adaptare, susceptanta in paralel

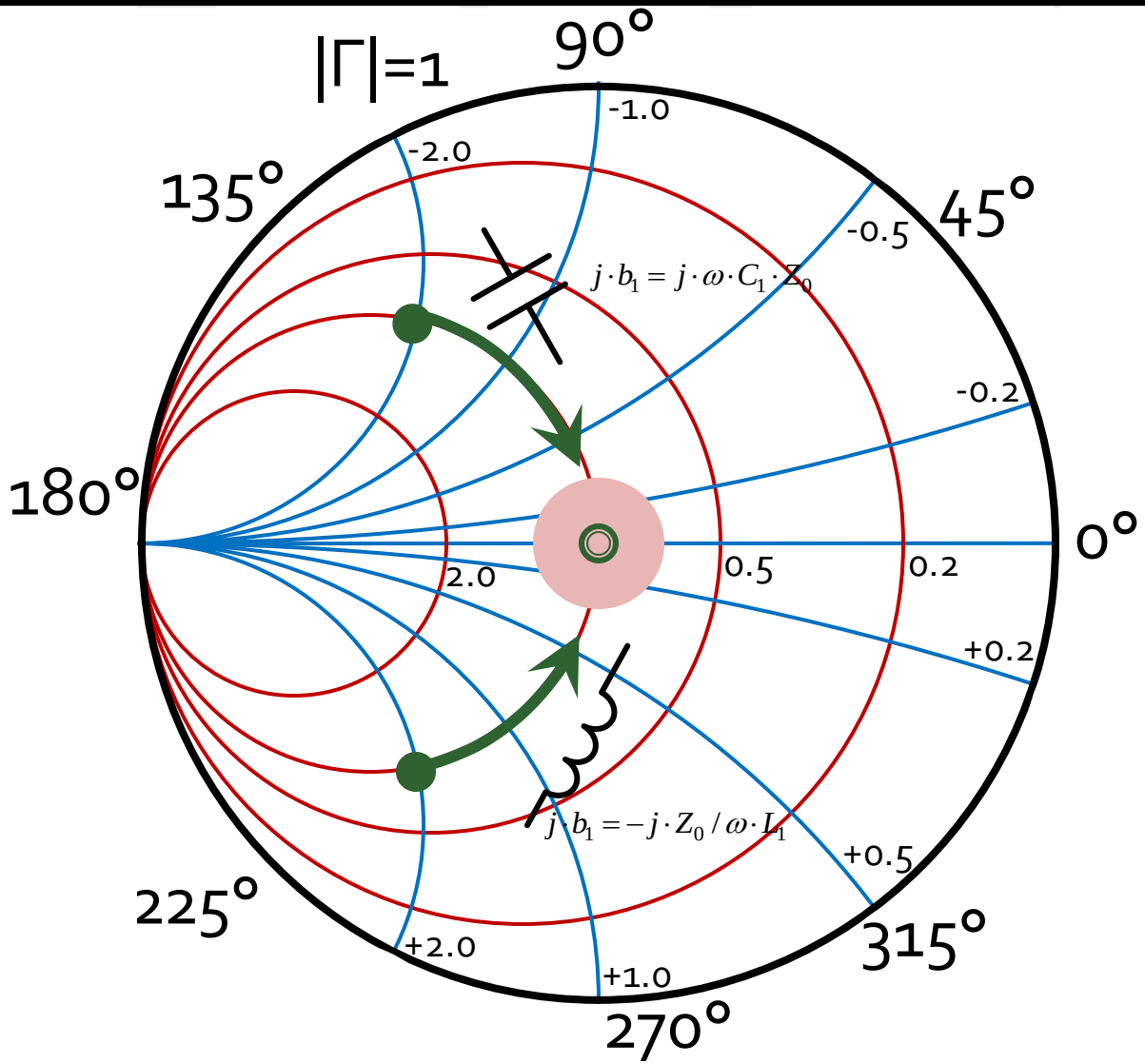

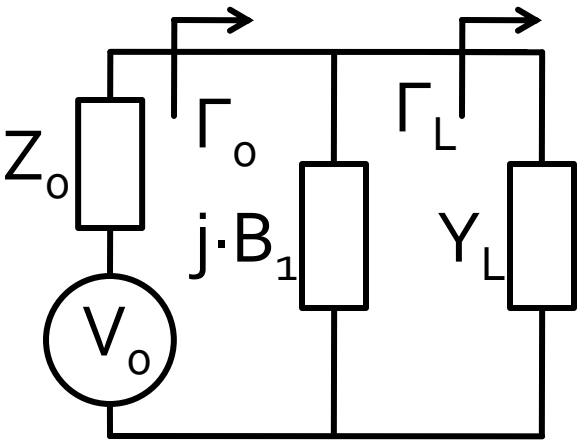

$$y_L = g_L + j \cdot b_L$$

$$y_{in} = g_L + j \cdot (b_L + b_1)$$

$$\boxed{g_{in} = g_L}$$

- Adaptarea se poate realiza **numai daca** $g_L = 1$
- se realizeaza compensarea partii reactive a sarcinii

$$j \cdot b_1 = -j \cdot b_L$$

Diagrama Smith, r=1 si g=1

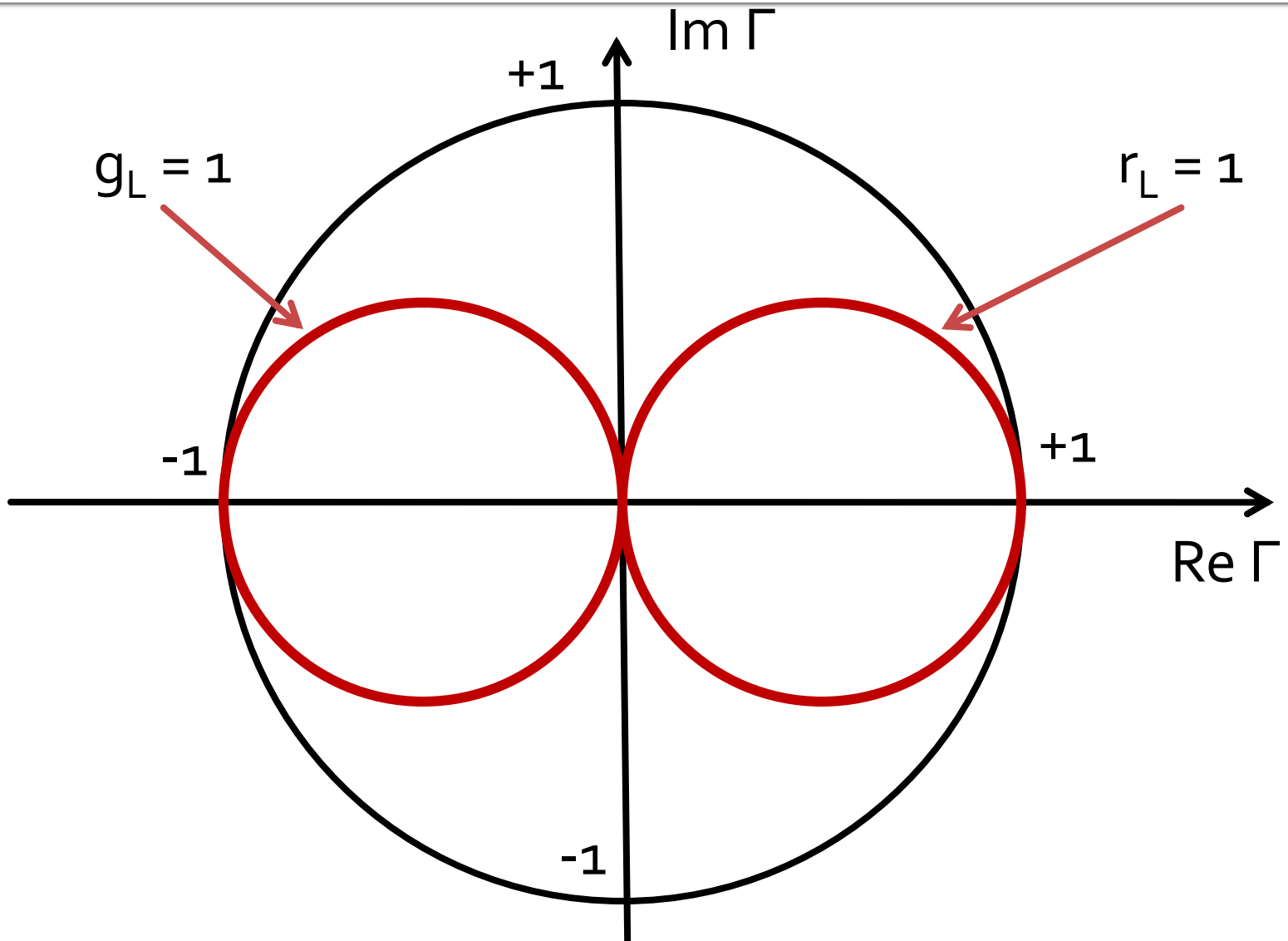

Adaptare cu doua elemente reactive (retele in L)

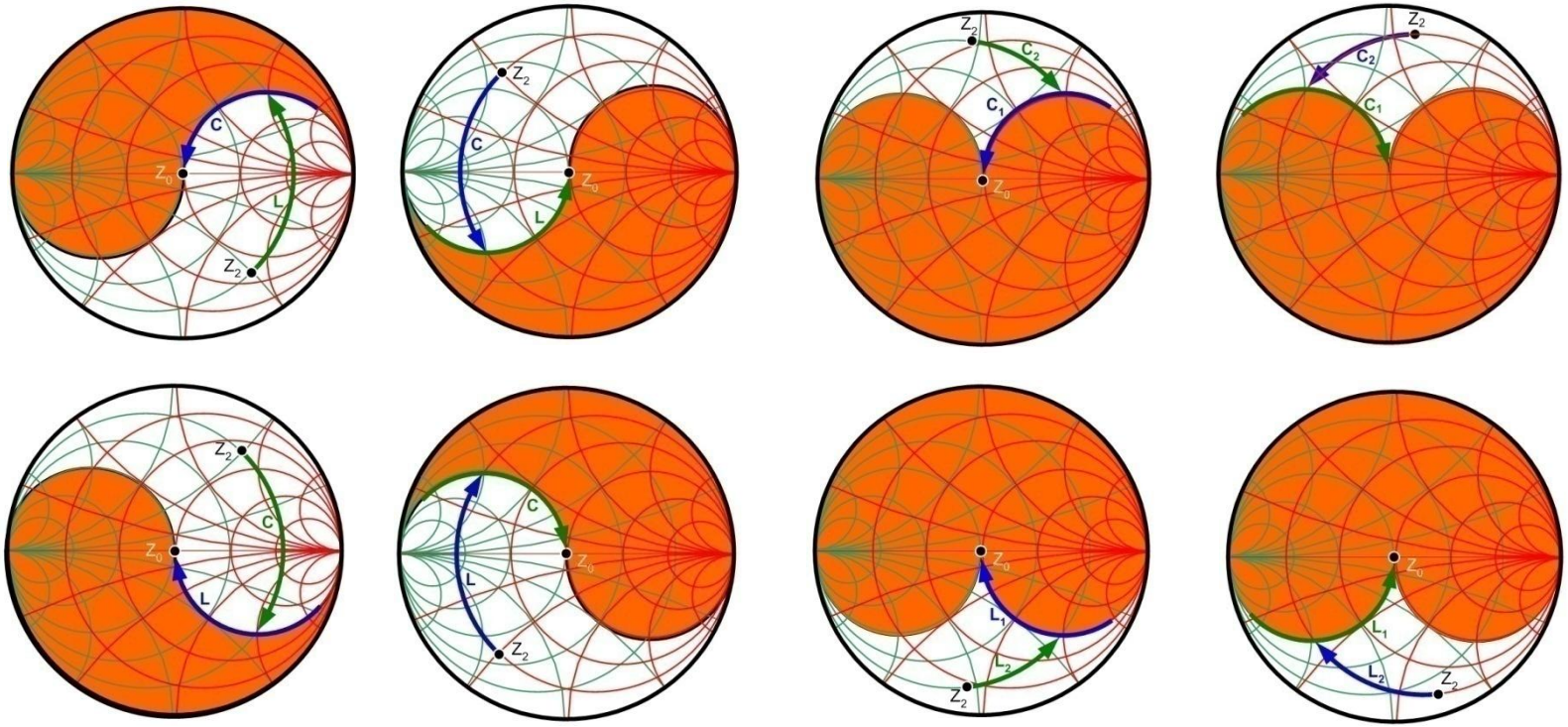

Zona interzisa cu schema curenta

Adaptarea cu sectiuni de linii (stub)

Adaptarea de impedanța

Diagrama Smith, r=1 si g=1

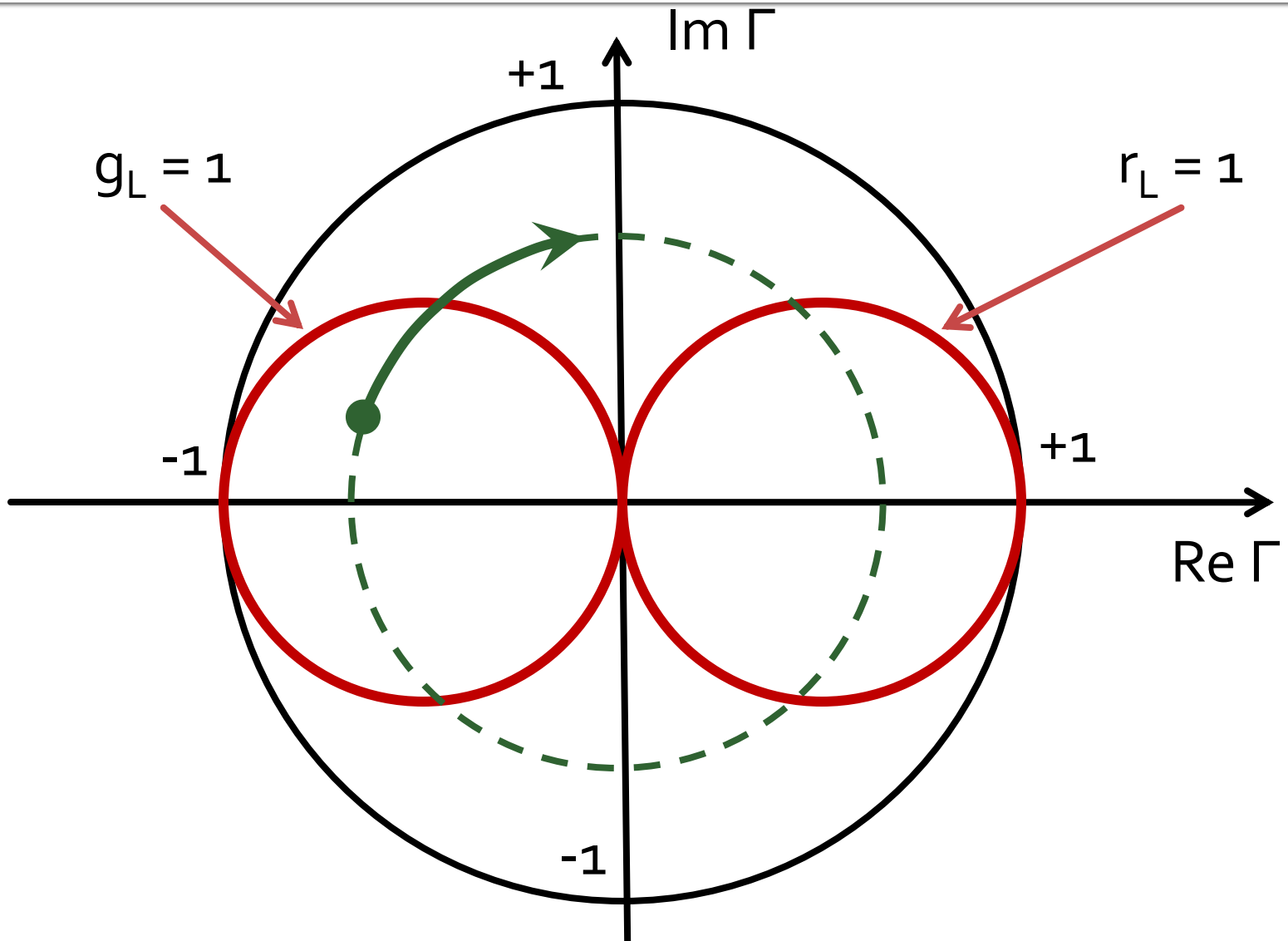

Single stub tuning

- Shunt Stub (sectiune de linie in paralel)

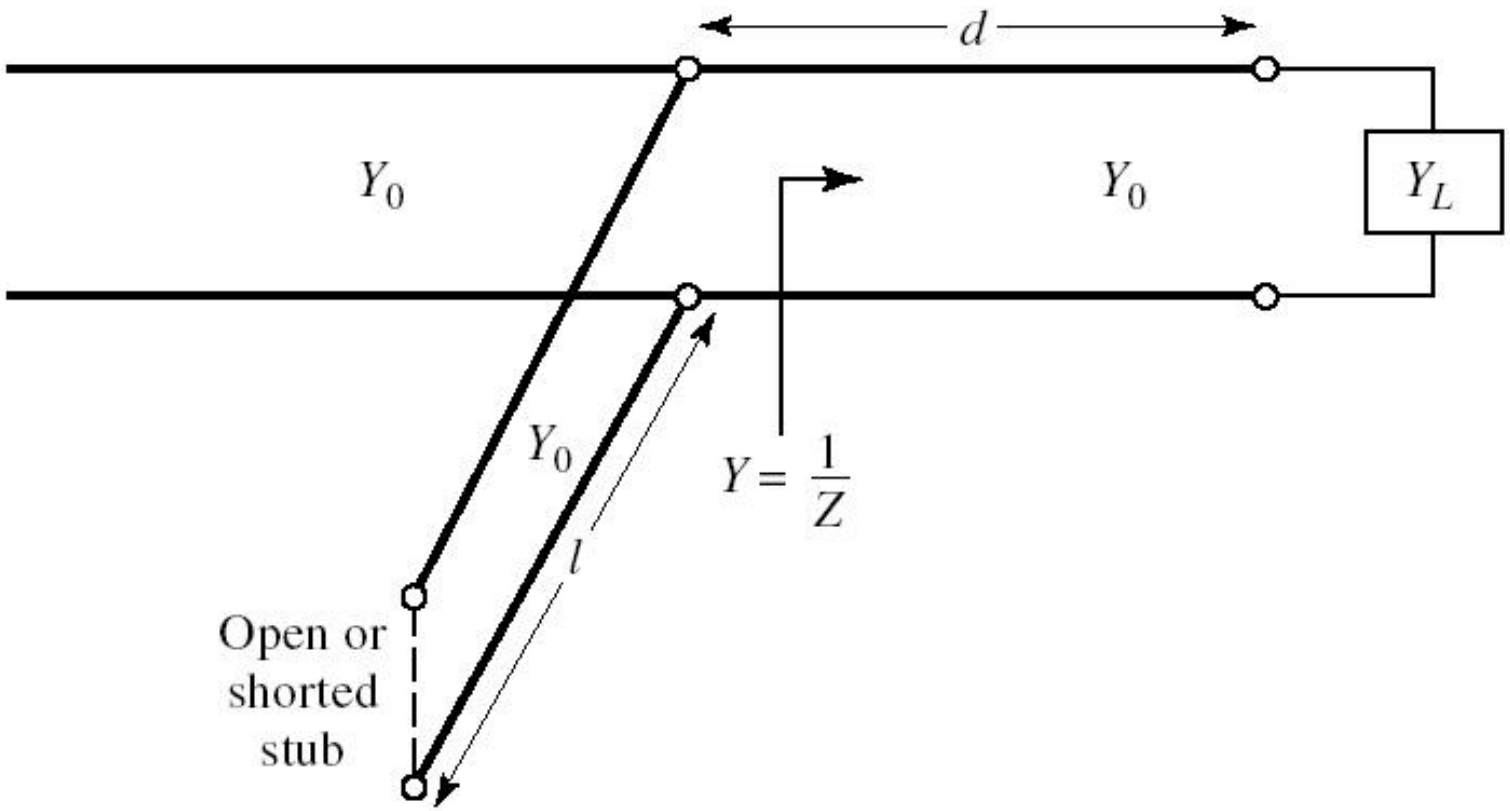

Single stub tuning

- Series Stub (sectiune de linie in serie)
- tehnologic mai dificil de realizat la liniile monofilare (microstrip)

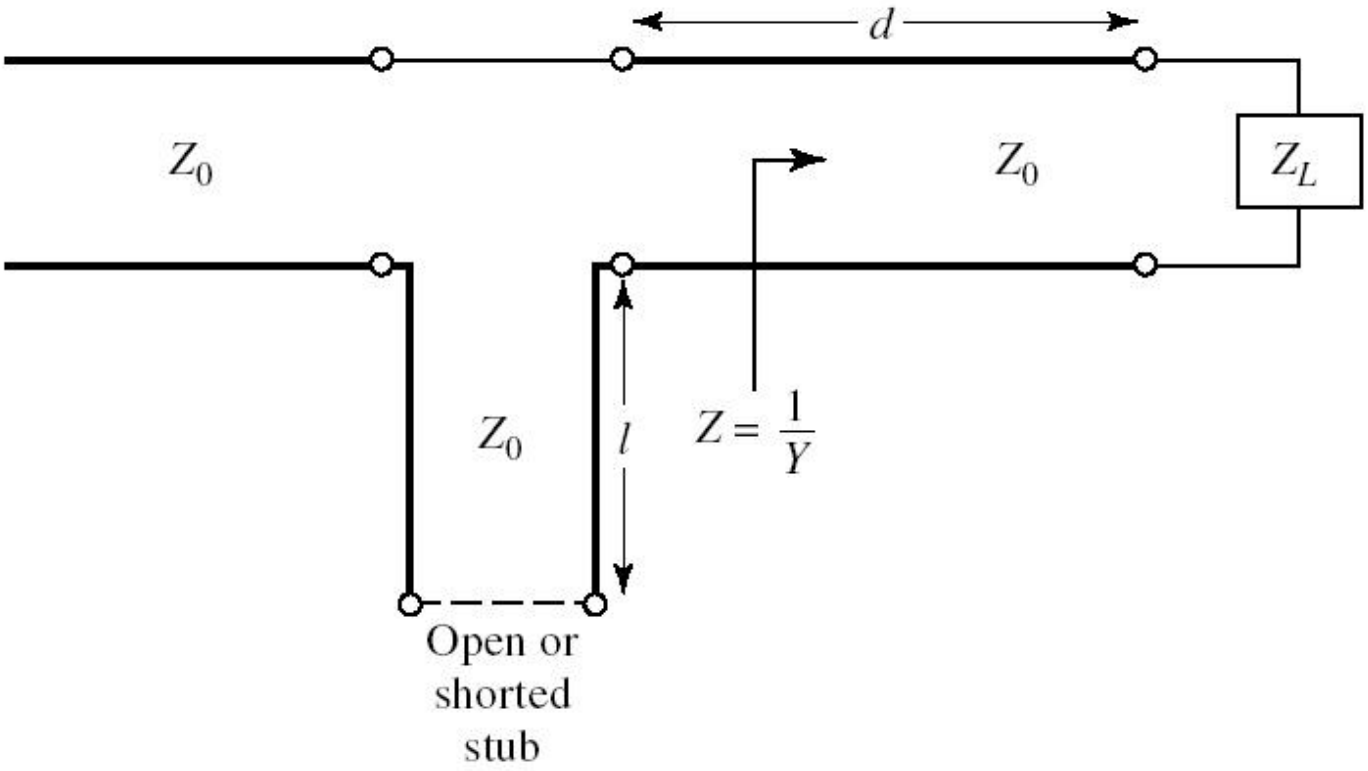

Caz 1, Shunt Stub

- Shunt Stub (sectiune de linie in paralel)

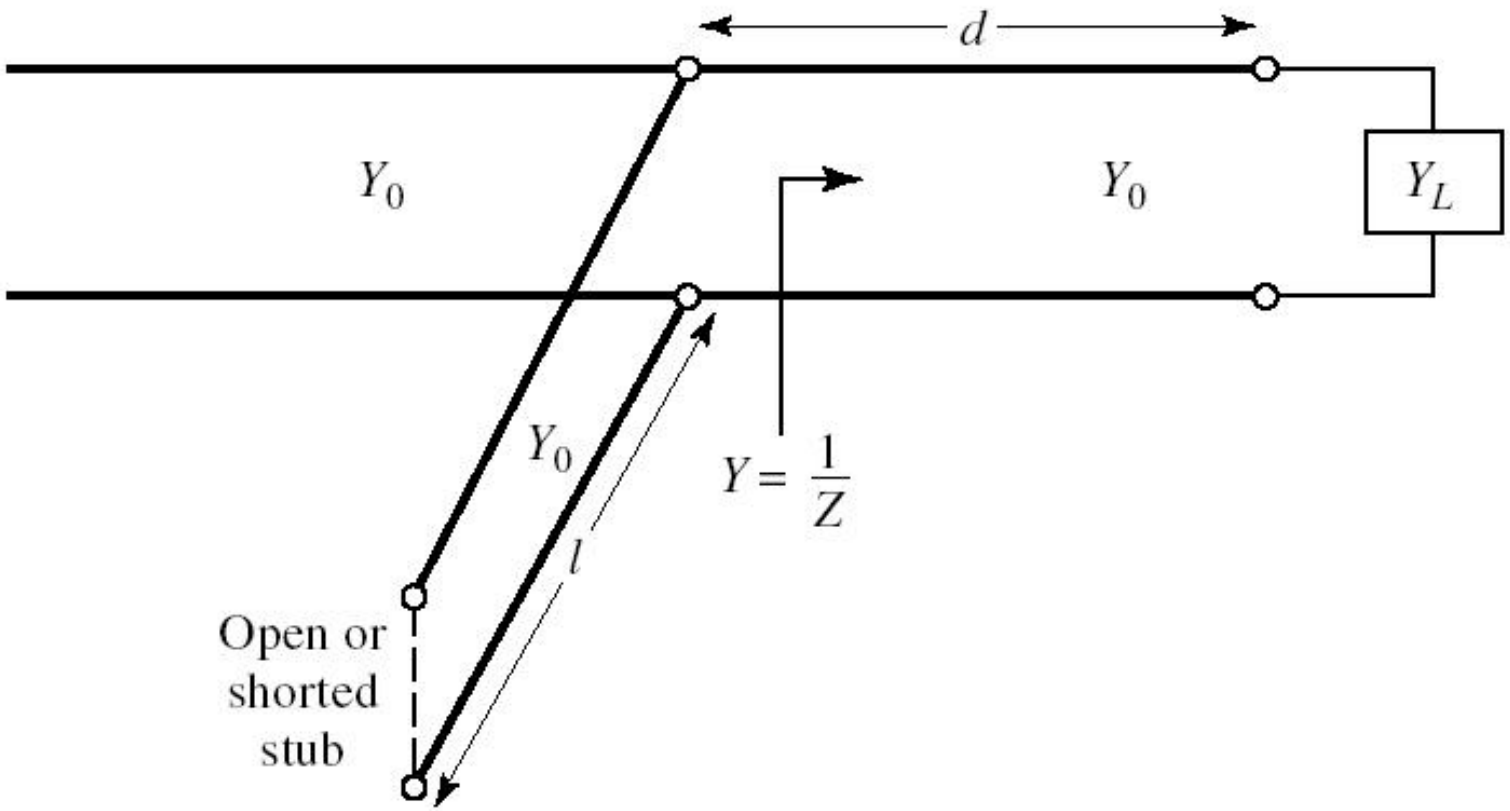

Adaptare, linie serie + susceptanta in paralel

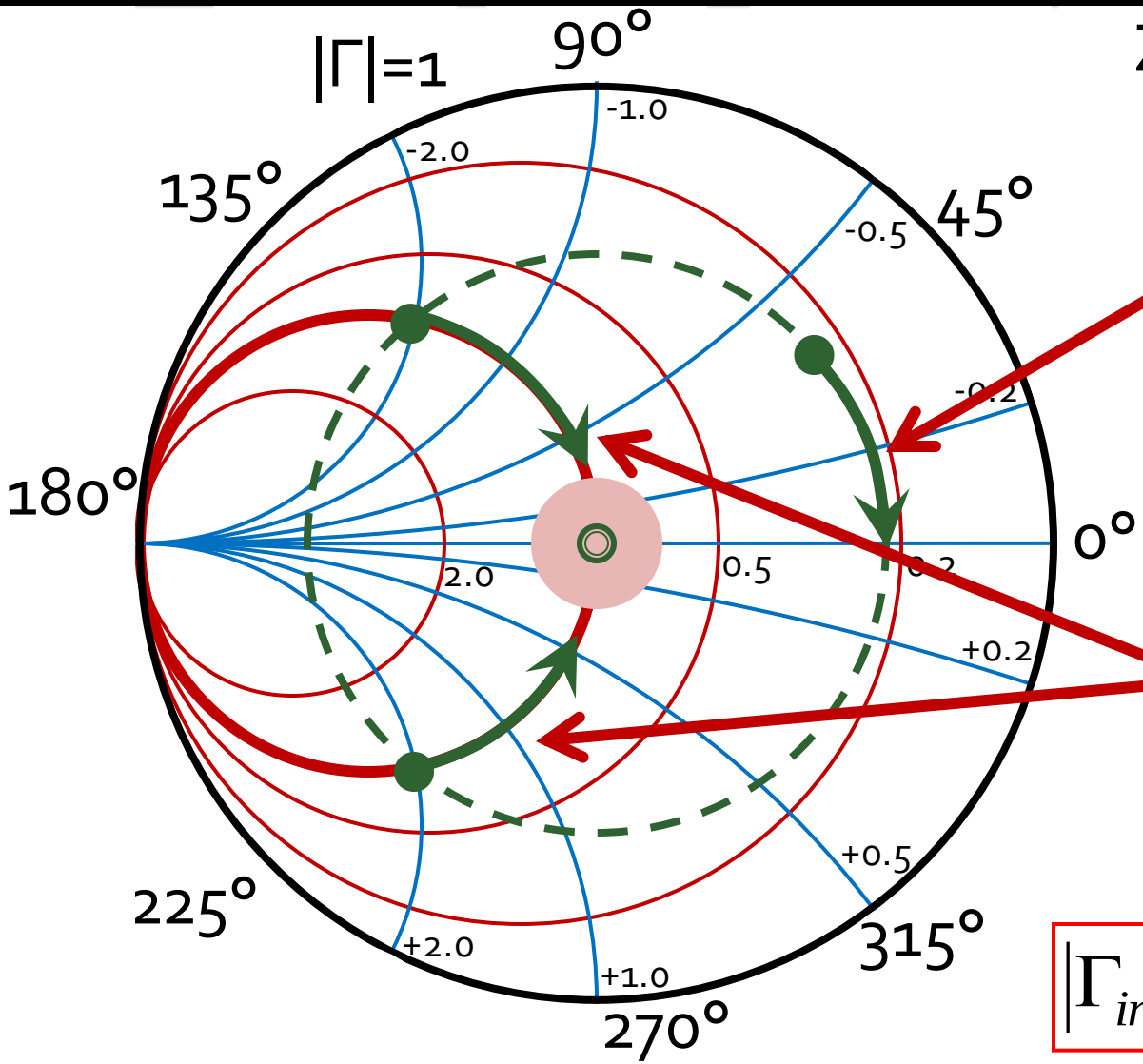

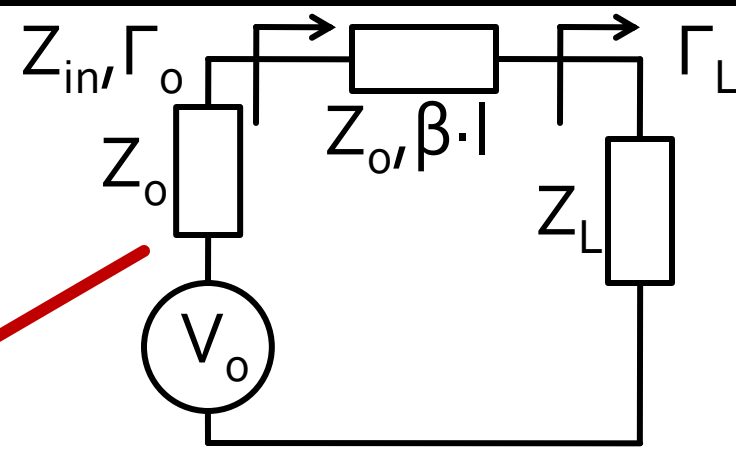

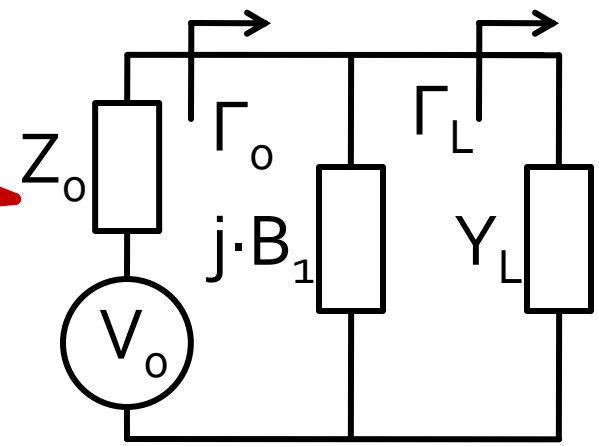

$$\boxed{|\Gamma_{in}| = |\Gamma_L|}$$

$$\boxed{g_{in} = 1}$$

Calcul analitic (calcul efectiv)

$$\boxed{\cos(\varphi+2\theta)=-|\Gamma_S|}$$

$$\boxed{\theta_{sp}=\beta\cdot l=\tan^{-1}\frac{\mp 2\cdot|\Gamma_S|}{\sqrt{1-|\Gamma_S|^2}}}$$

$$\Gamma_S=0.593\angle 46.85^\circ$$

$$|\Gamma_S|=0.593;\quad \varphi=46.85^\circ \qquad \cos(\varphi+2\theta)=-0.593\Rightarrow\ (\varphi+2\theta)=\pm 126.35^\circ$$

- **Semnul** (+/-) solutiei alese la ecuatia **liniei serie** impune **semnul** solutiei utilizate la ecuatia **stub-ului paralel**
  - **solutia "cu +"**

    $$(46.85^\circ+2\theta)=+126.35^\circ \qquad \theta=+39.7^\circ \qquad \operatorname{Im} y_S=\frac{-2\cdot|\Gamma_S|}{\sqrt{1-|\Gamma_S|^2}}=-1.472$$

    $$\theta_{sp}=\tan^{-1}(\operatorname{Im} y_S)=-55.8^\circ(+180^\circ)\rightarrow\theta_{sp}=124.2^\circ$$

  - **solutia "cu -"**

    $$(46.85^\circ+2\theta)=-126.35^\circ \qquad \theta=-86.6^\circ(+180^\circ)\rightarrow\theta=93.4^\circ$$

    $$\operatorname{Im} y_S=\frac{+2\cdot|\Gamma_S|}{\sqrt{1-|\Gamma_S|^2}}=+1.472 \qquad \theta_{sp}=\tan^{-1}(\operatorname{Im} y_S)=55.8^\circ$$

Calcul analitic (calcul efectiv)

$$(\varphi+2\theta)=\begin{cases}+126.35^\circ\\-126.35^\circ\end{cases}\quad \theta=\begin{cases}39.7^\circ\\93.4^\circ\end{cases}\quad \mathrm{Im}[y_S(\theta)]=\begin{cases}-1.472\\+1.472\end{cases}\quad \theta_{sp}=\begin{cases}-55.8^\circ+180^\circ=124.2^\circ\\+55.8^\circ\end{cases}$$

- Se alege **una** din cele doua solutii posibile
- **Semnul** (+/-) solutiei alese la **prima** ecuatie impune **semnul** solutiei utilizate la a **doua** ecuatie

$$l_1=\frac{39.7^\circ}{360^\circ}\cdot\lambda=0.110\cdot\lambda$$

$$l_2=\frac{124.2^\circ}{360^\circ}\cdot\lambda=0.345\cdot\lambda$$

$$l_1=\frac{93.4^\circ}{360^\circ}\cdot\lambda=0.259\cdot\lambda$$

$$l_2=\frac{55.8^\circ}{360^\circ}\cdot\lambda=0.155\cdot\lambda$$

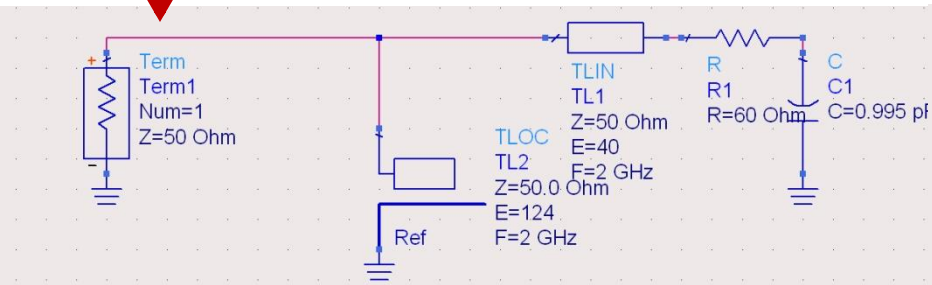

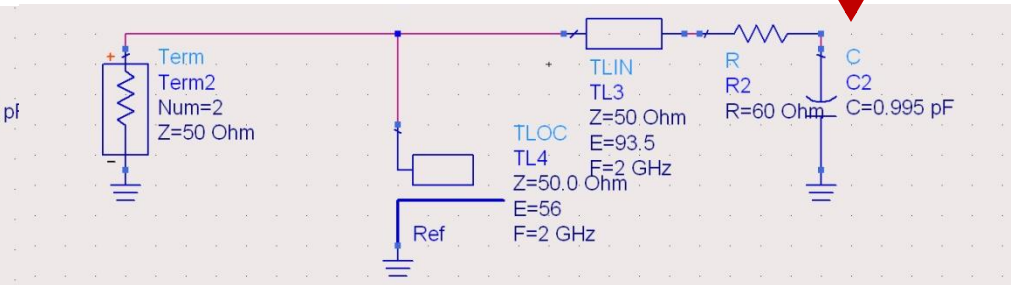

Caz 2, Series Stub

- Series Stub (sectiune de linie in serie)
- tehnologic mai dificil de realizat la liniile monofilare (microstrip)

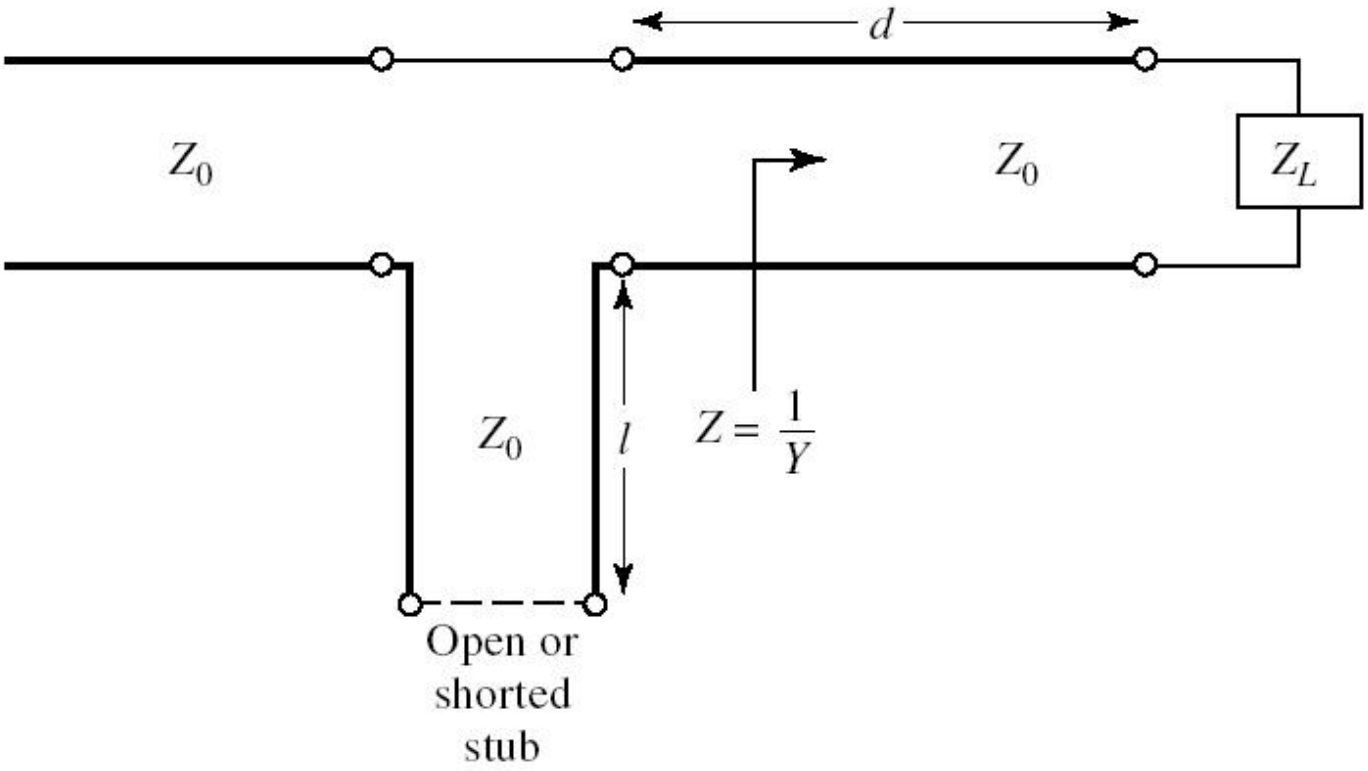

Adaptare, linie serie + reactanta in serie

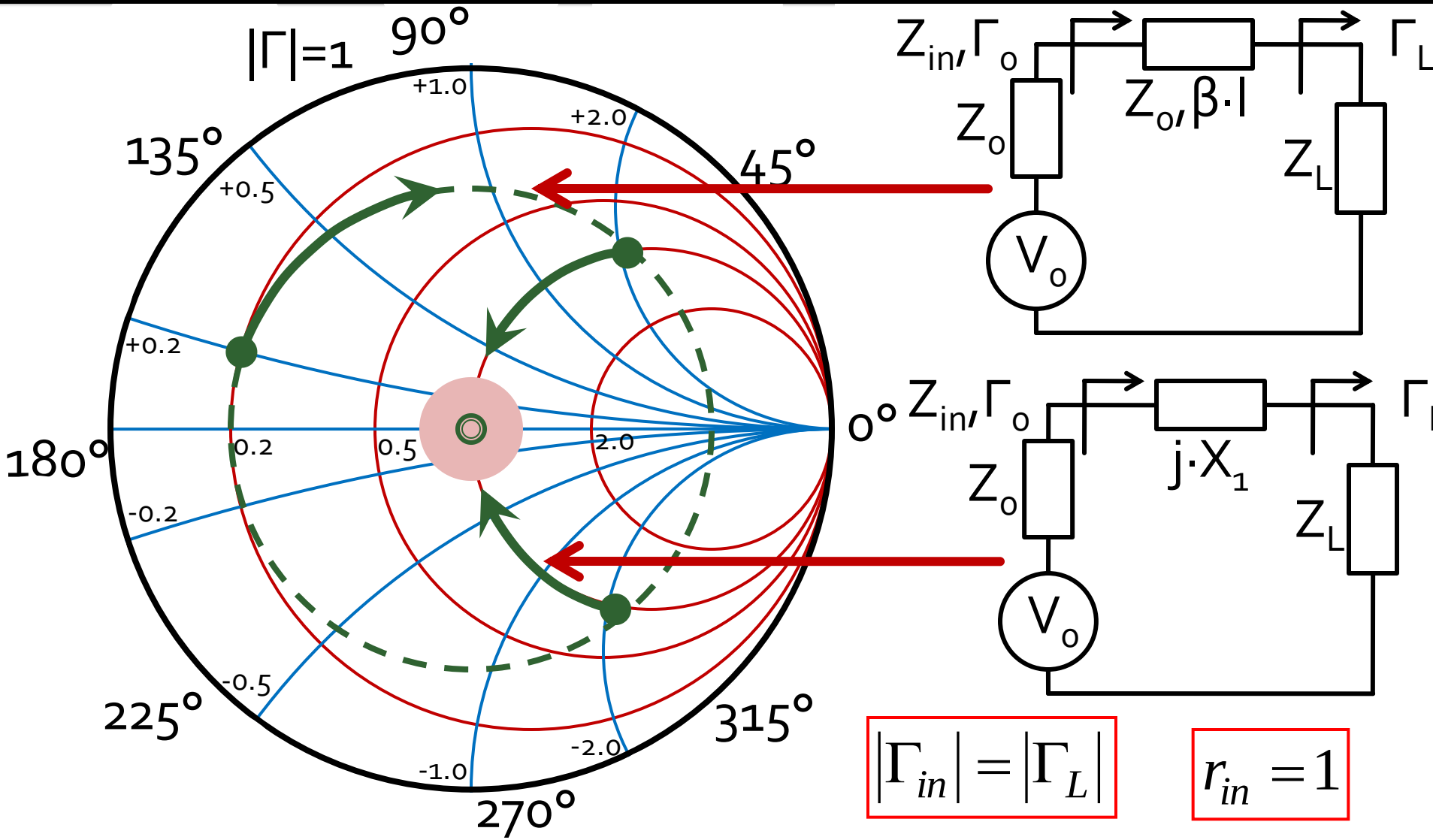

Calcul analitic (calcul efectiv)

$$\boxed{\cos(\varphi+2\theta)=|\Gamma_S|}$$

$$\boxed{\theta_{ss}=\beta\cdot l=\cot^{-1}\frac{\mp 2\cdot|\Gamma_S|}{\sqrt{1-|\Gamma_S|^2}}}$$

$$\Gamma_S=0.555\angle-29.92^\circ$$

$$|\Gamma_S|=0.555;\quad \varphi=-29.92^\circ \qquad \cos(\varphi+2\theta)=0.555\Rightarrow(\varphi+2\theta)=\pm 56.28^\circ$$

- **Semnul** (+/-) solutiei alese la ecuatia **liniei serie** impune **semnul** solutiei utilizate la ecuatia **stub-ului serie**
  - **solutia "cu +"**

$$(-29.92^\circ+2\theta)=+56.28^\circ \qquad \theta=43.1^\circ \qquad \operatorname{Im} z_S=\frac{+2\cdot|\Gamma_S|}{\sqrt{1-|\Gamma_S|^2}}=+1.335$$

$$\theta_{ss}=-\cot^{-1}(\operatorname{Im} z_S)=-36.8^\circ(+180^\circ)\rightarrow\theta_{ss}=143.2^\circ$$

  - **solutia "cu -"**

$$(-29.92^\circ+2\theta)=-56.28^\circ \qquad \theta=-13.2^\circ(+180^\circ)\rightarrow\theta=166.8^\circ$$

$$\operatorname{Im} z_S=\frac{-2\cdot|\Gamma_S|}{\sqrt{1-|\Gamma_S|^2}}=-1.335 \qquad \theta_{ss}=-\cot^{-1}(\operatorname{Im} z_S)=36.8^\circ$$

Calcul analitic (calcul efectiv)

$$(\varphi+2\theta)=\begin{cases}+56.28^\circ\\-56.28^\circ\end{cases}\quad \theta=\begin{cases}43.1^\circ\\166.8^\circ\end{cases}\quad \mathrm{Im}[z_S(\theta)]=\begin{cases}+1.335\\-1.335\end{cases}\quad \theta_{ss}=\begin{cases}-36.8^\circ+180^\circ=143.2^\circ\\+36.8^\circ\end{cases}$$

- Se alege **una** din cele doua solutii posibile
- **Semnul** (+/-) solutiei alese la **prima** ecuatie impune **semnul** solutiei utilizate la a **doua** ecuatie

$$l_1=\frac{43.1^\circ}{360^\circ}\cdot\lambda=0.120\cdot\lambda$$

$$l_2=\frac{143.2^\circ}{360^\circ}\cdot\lambda=0.398\cdot\lambda$$

$$l_1=\frac{166.8^\circ}{360^\circ}\cdot\lambda=0.463\cdot\lambda$$

$$l_2=\frac{36.8^\circ}{360^\circ}\cdot\lambda=0.102\cdot\lambda$$

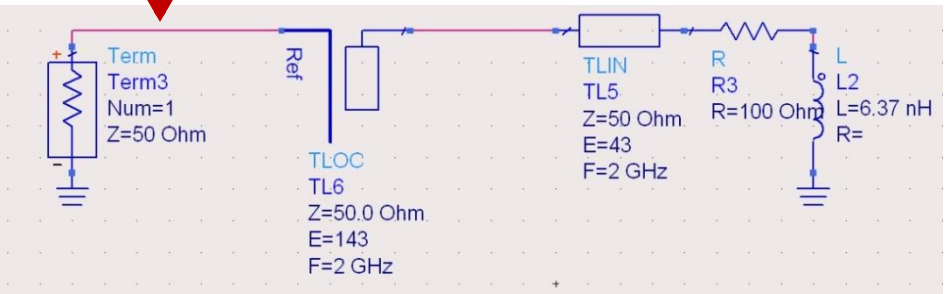

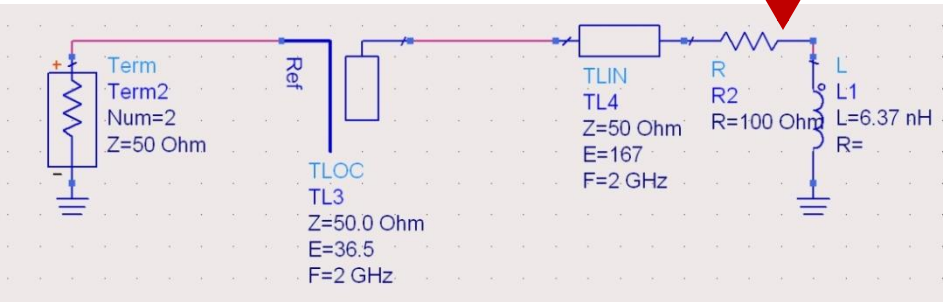

Adaptarea cu sectiuni de linii (stub)

- Se alege una din cele 8 solutii posibile convenabila tinand cont de:
  - dimensiuni fizice (suprafata ocupata pe chip/placa)
  - sensibilitatea adaptarii la variatia parametrilor fizici ai liniilor ($\Delta\Gamma/\Delta E$, $\Delta\Gamma/\Delta l$)
  - caracteristica de frecventa convenabila

Adaptarea cu sectiuni de linii (stub)

- Se alege una din cele 8 solutii posibile convenabila tinand cont de:
  - realizabilitate fizica (conform tehnologiei de linie utilizata)

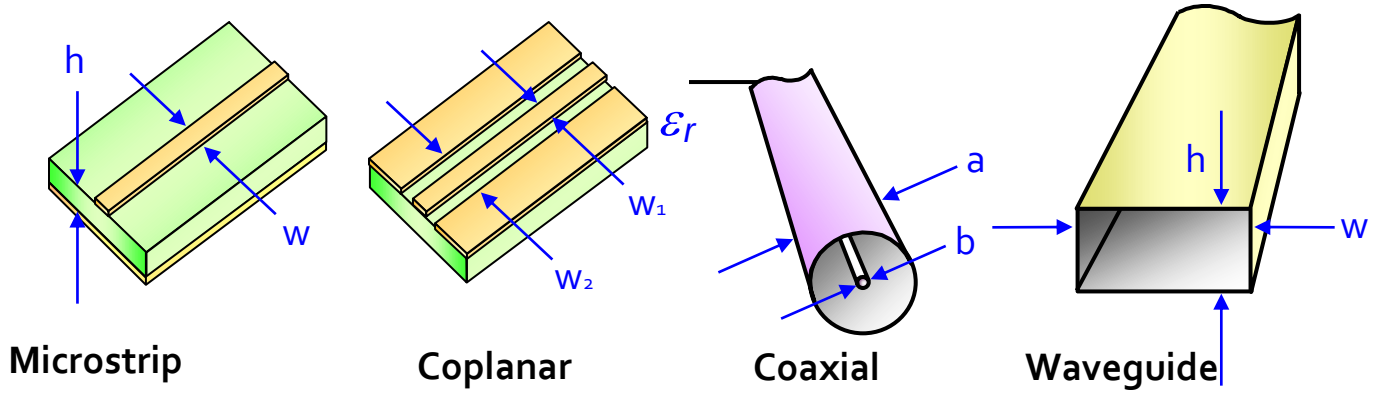

- Dezavantaj:
  - lungimea sectiunii de linie serie e variabila

Adaptarea cu doua sectiuni de linie

- Double stub tuning
- Se foloseste o lungime constanta de linie intre 2 stub-uri

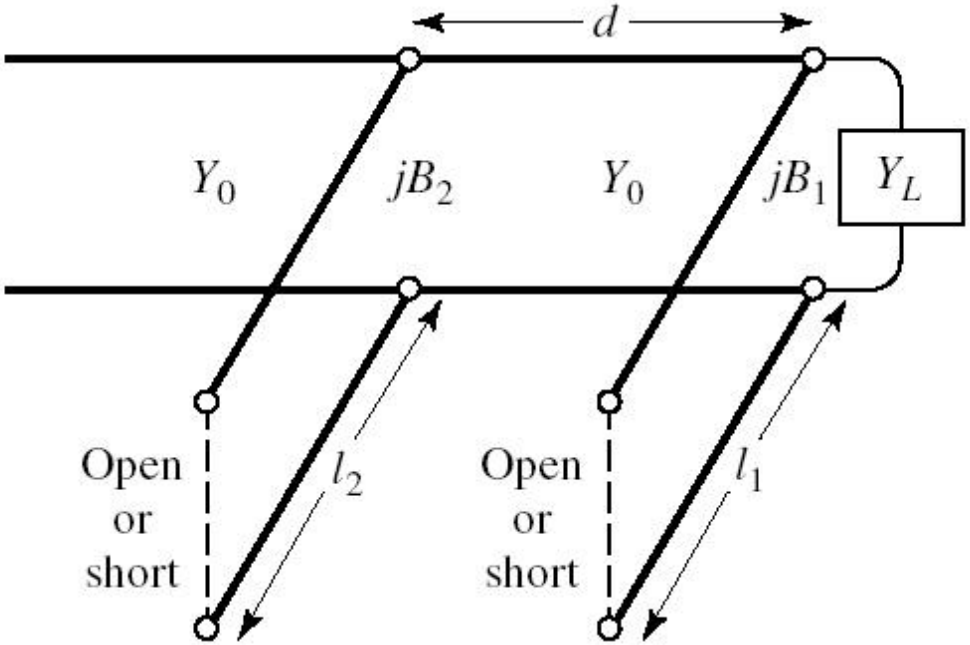

Adaptarea cu doua sectiuni de linie

- Doua solutii posibile

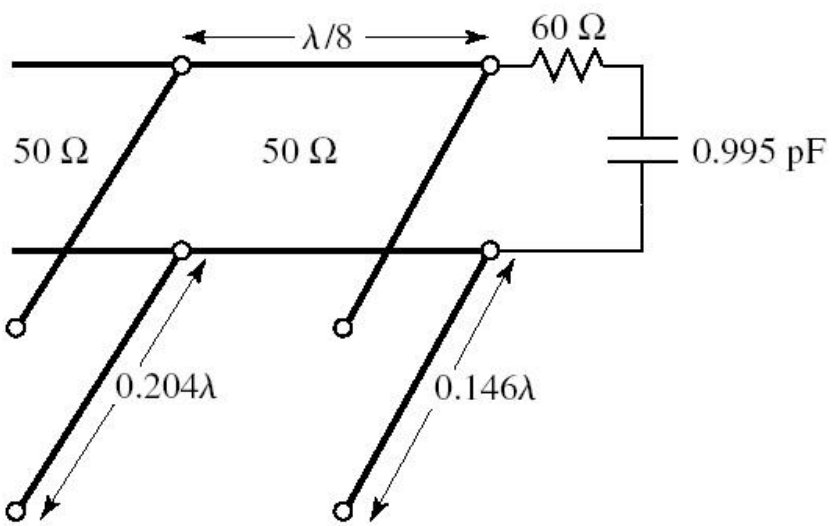

Solution 1

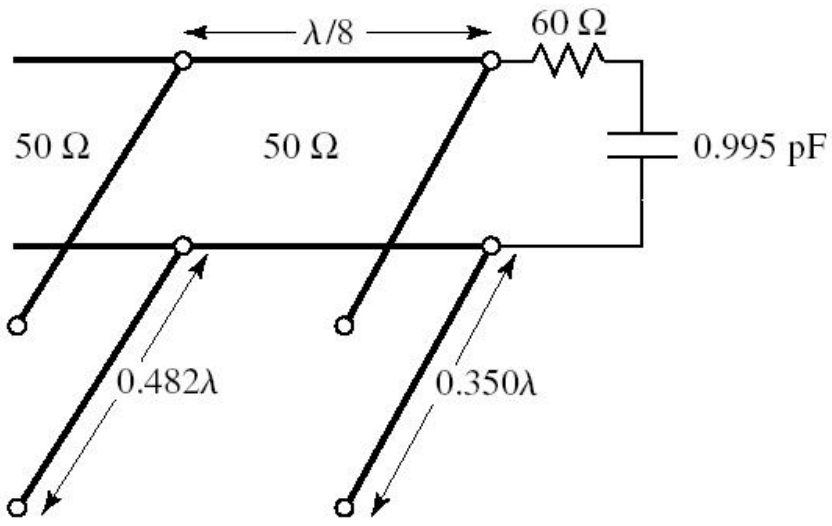

Solution 2

Adaptarea cu doua sectiuni de linie

- Doua solutii posibile

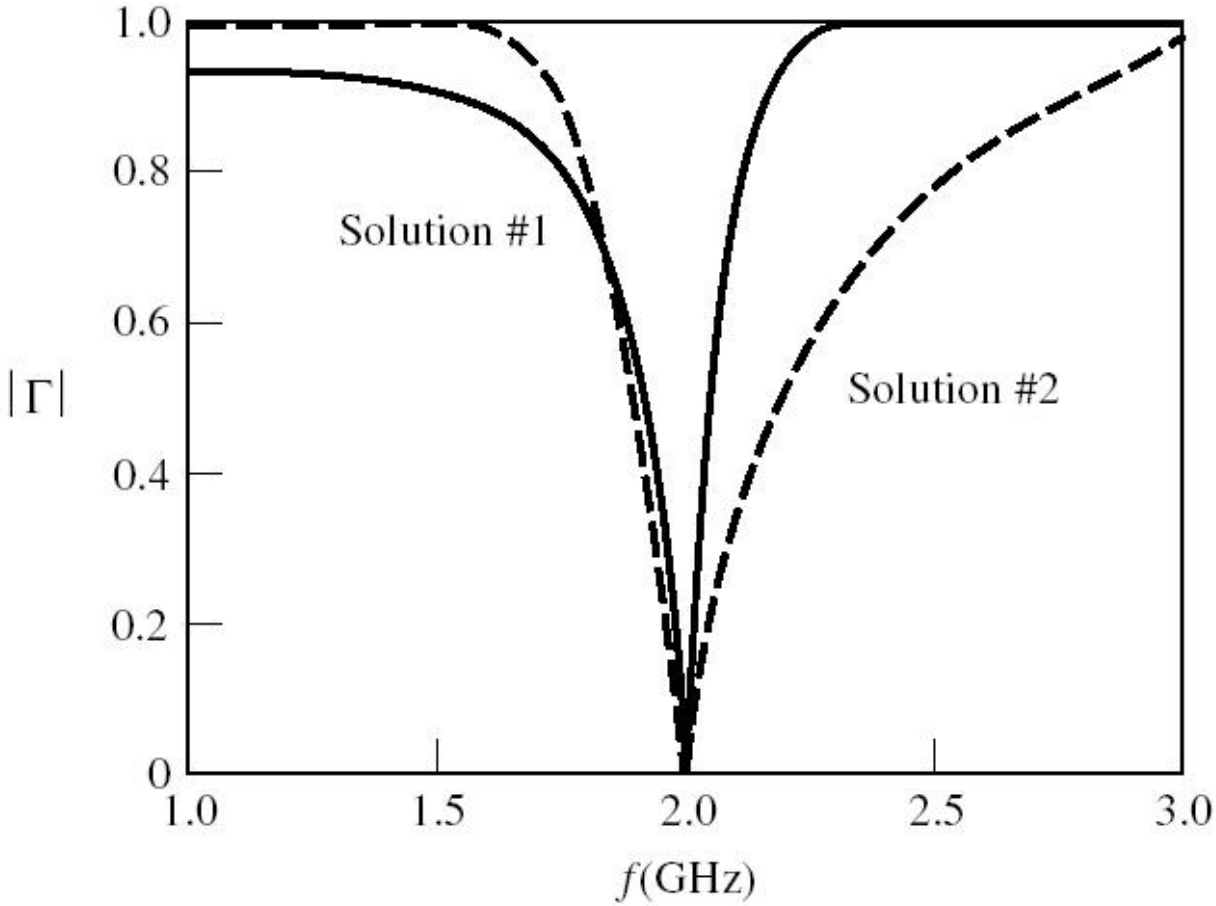

Adaptarea cu doua sectiuni de linie

- Tipic d=λ/8 sau d=3λ/8
- **Nu** pentru orice sarcina este posibila
  - decat daca se poate introduce o sectiune de linie pana la sarcina

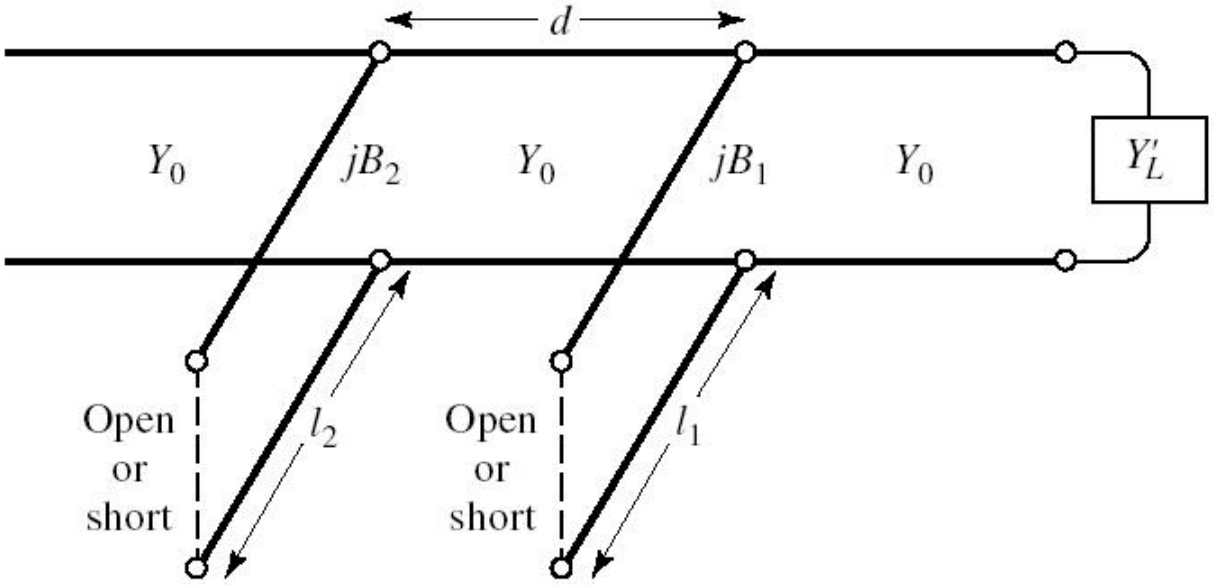

Adaptarea cu sectiuni de linie

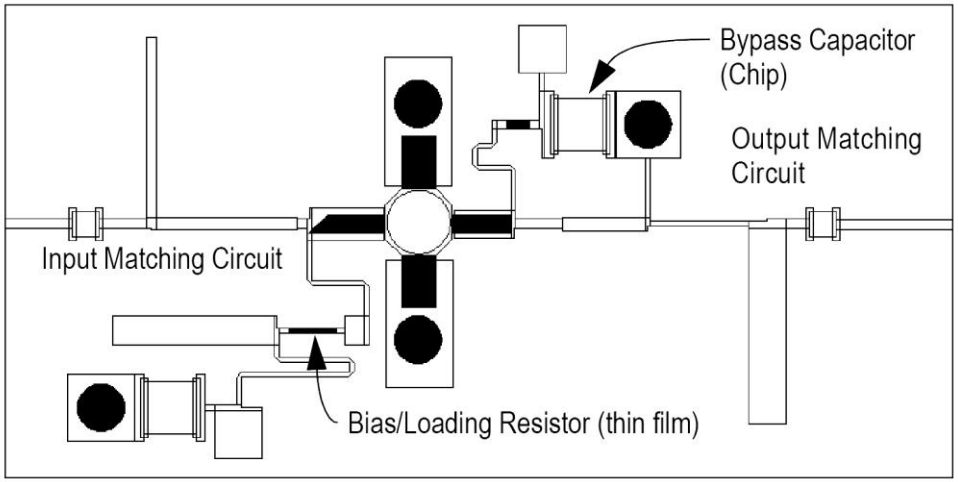

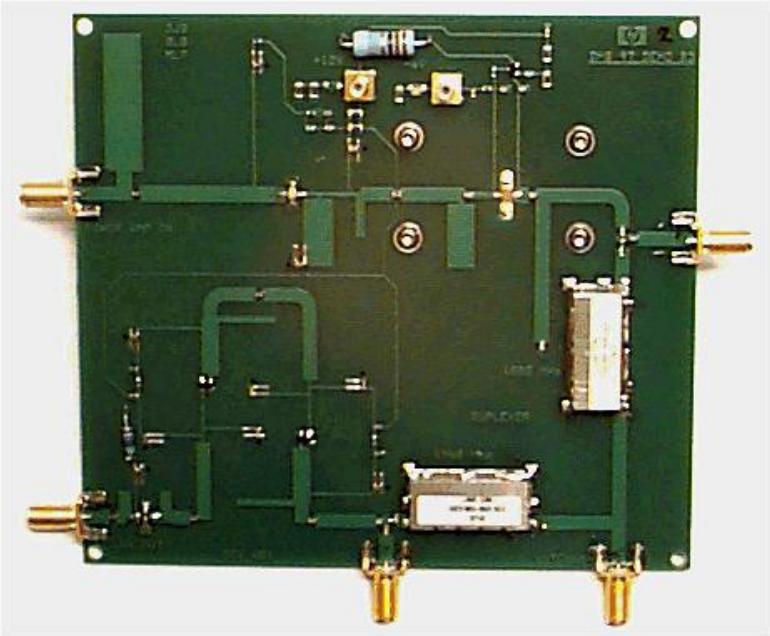

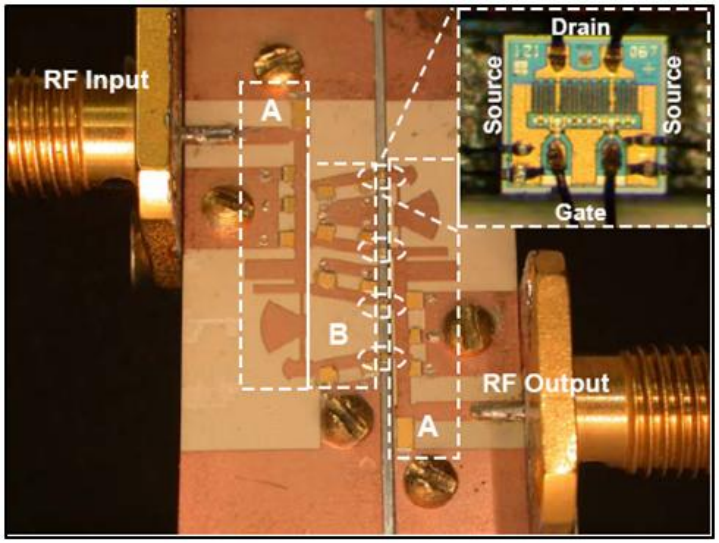

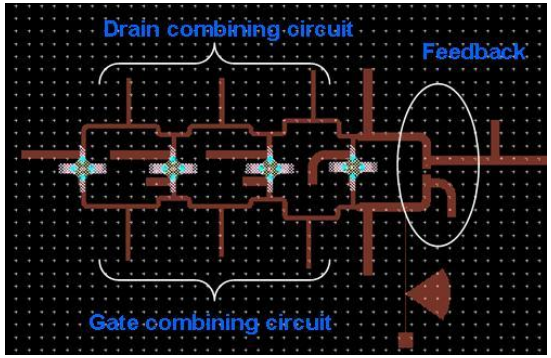

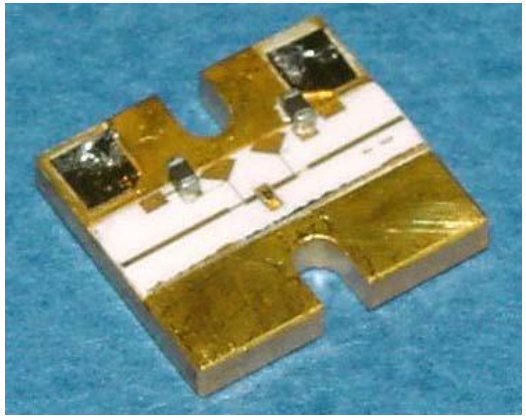

Amplificatoare de microunde

Amplificatoare pentru microunde

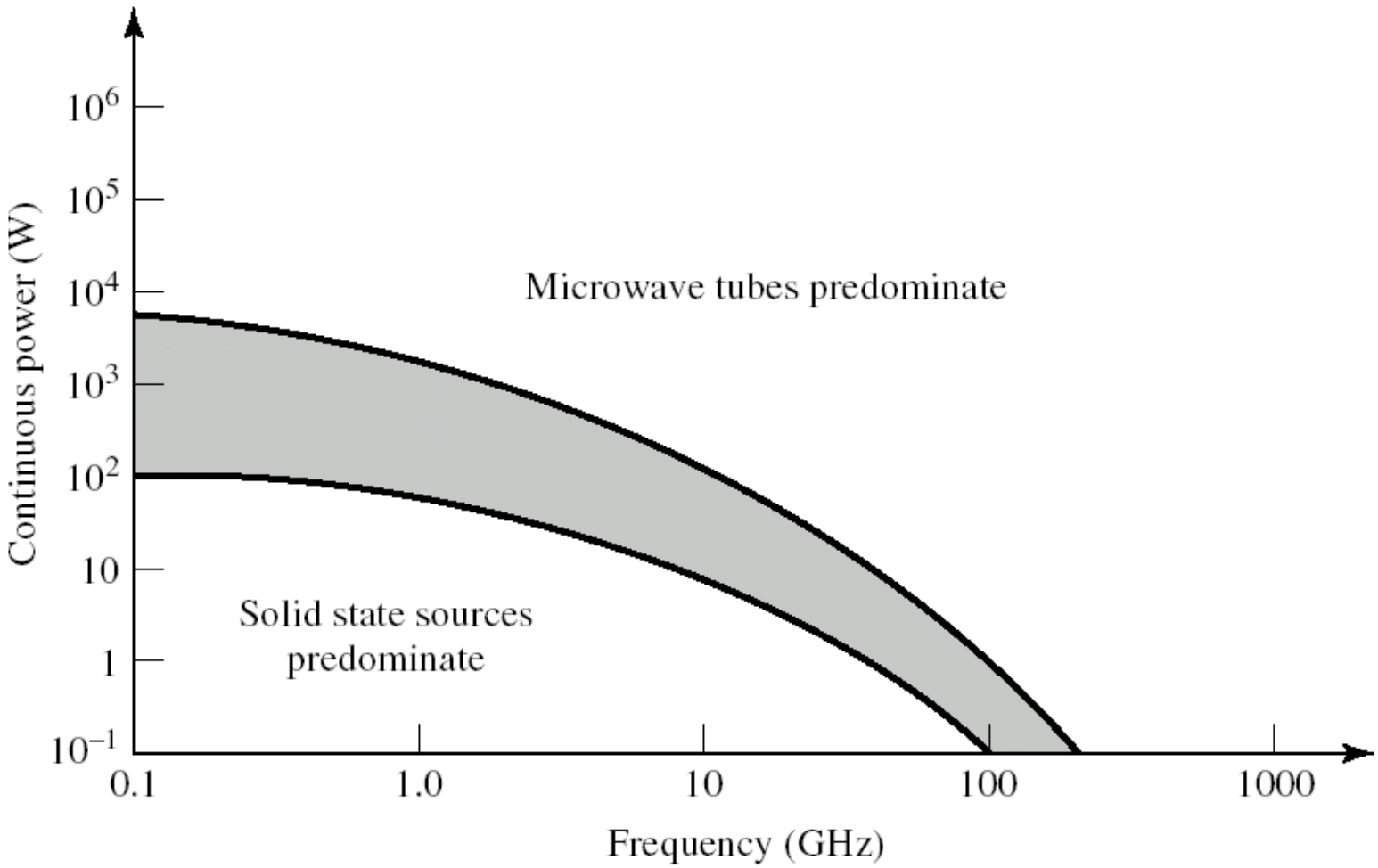

Circuite integrate pentru microunde

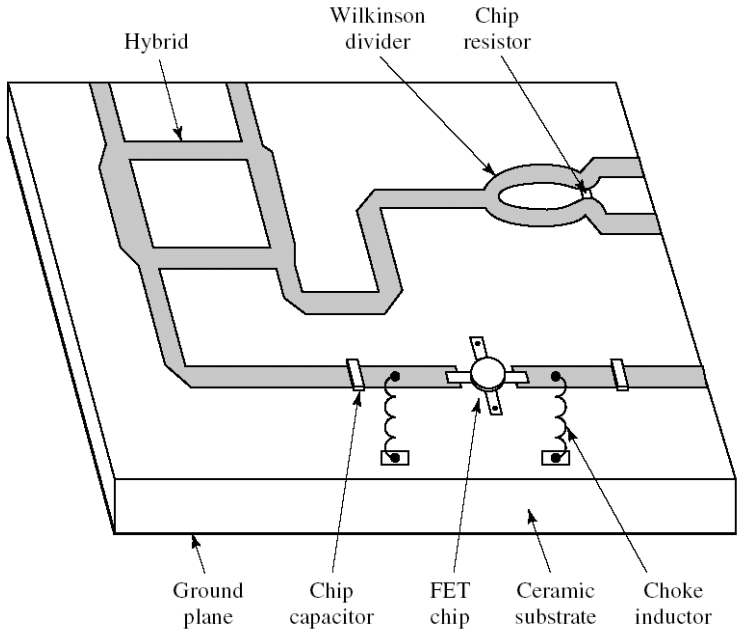

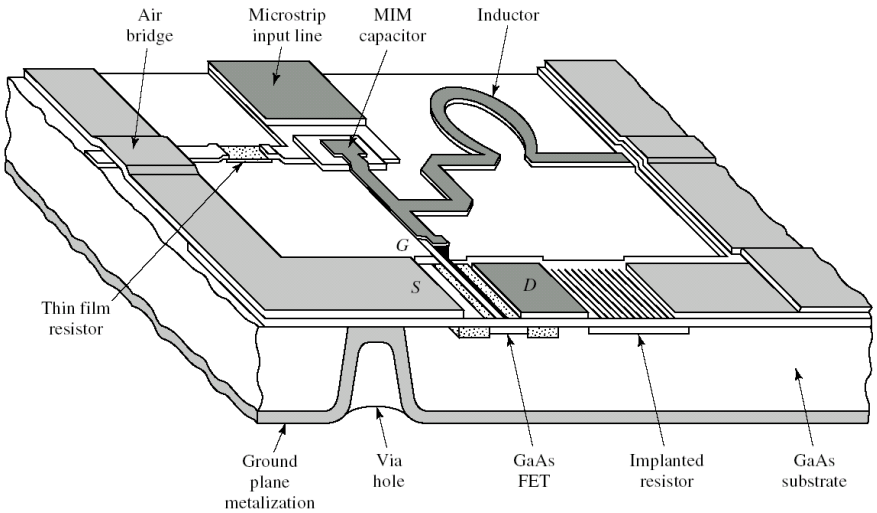

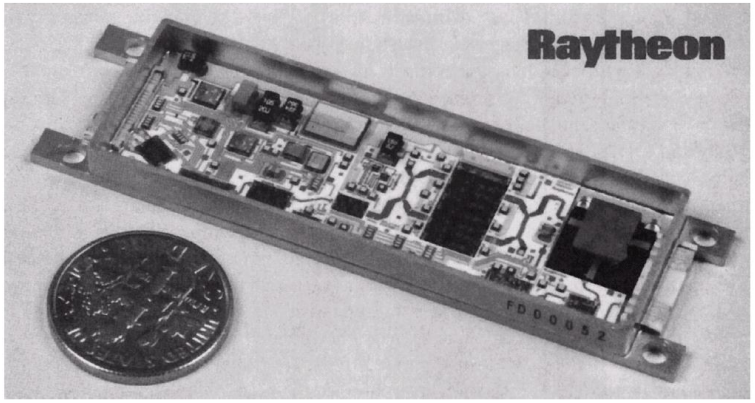

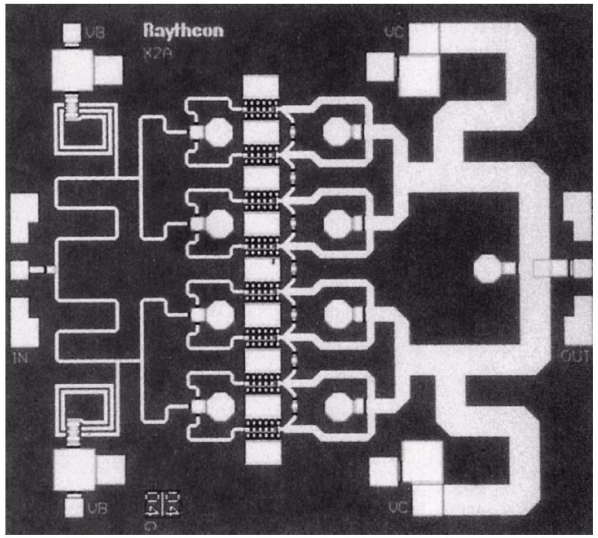

Cuadripol Amplificator (diport)

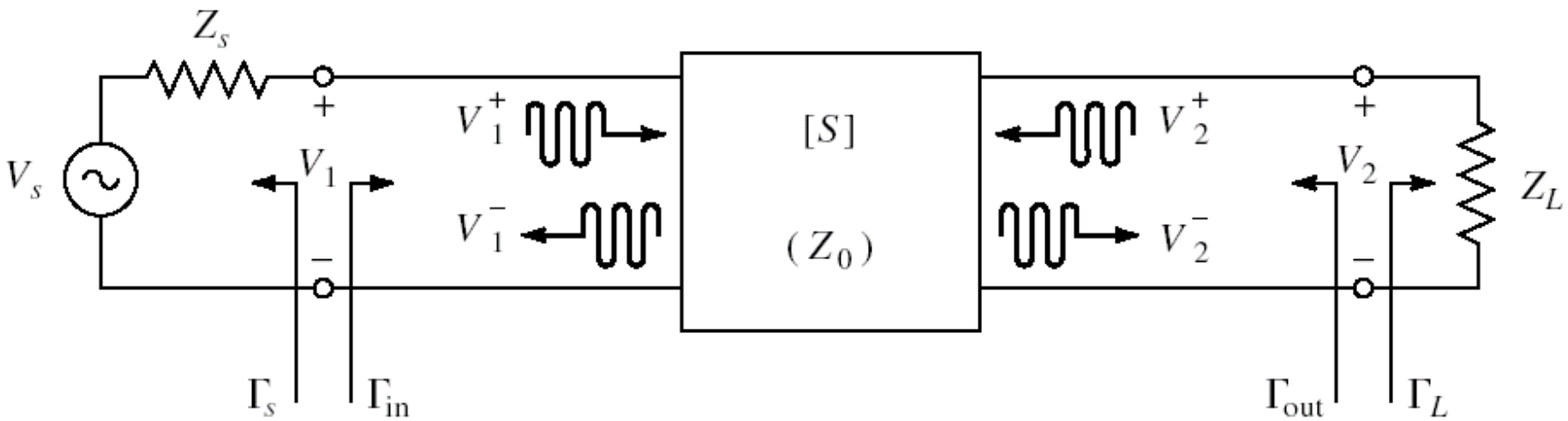

- Caracterizare cu parametri S
- Normalizati la Zo (implicit 50Ω)
- Cataloage: parametri S pentru anumite polarizari

Cataloage

CEL

NE46100 / NE46134

NPN MEDIUM POWER MICROWAVE TRANSISTOR

FEATURES

- **HIGH DYNAMIC RANGE**
- **LOW IM DISTORTION:** -40 dBc
- **HIGH OUTPUT POWER :** 27.5 dBm at TYP
- **LOW NOISE:** 1.5 dB TYP at 500 MHz
- **LOW COST**

NE46134
TYPICAL OUTPUT POWER
vs. INPUT POWER
f = 1.0 GHz, Ic = 100 mA

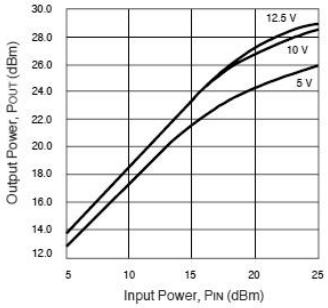

DESCRIPTION

The NE461 series of NPN silicon epitaxial bipolar transistors is designed for medium power applications requiring high dynamic range. This device exhibits an outstanding combination of high gain and low intermodulation distortion, as well as low noise figure. The NE461 series offers excellent performance and reliability at low cost through titanium, platinum, gold metallization system and direct nitride passivation of the surface of the chip. Devices are available in a low cost surface mount package (SOT-89) as well as in chip form.

ELECTRICAL CHARACTERISTICS (T_A = 25°C)

PART NUMBER EIAJ[1] REGISTERED NUMBER PACKAGE OUTLINE			NE46100 00 (CHIP)			NE46134 2SC4536 34		
SYMBOLS	PARAMETERS AND CONDITIONS	UNITS	MIN	TYP	MAX	MIN	TYP	MAX
f_T	Gain Bandwidth Product at V_{CE} = 10 V, I_C = 100 mA	GHz		5.5			5.5	
NF_{MIN}	Minimum Noise Figure[3] at V_{CE} = 10 V, I_C = 50 mA, 500 MHz V_{CE} = 10 V, I_C = 50 mA, 1 GHz	dB dB		1.5 2.0			1.5 2.0	
G_L	Linear Gain, V_{CE} = 12.5 V, I_C = 100 mA, 2.0 GHz V_{CE} = 12.5 V, I_C = 100 mA, 1.0 GHz	dB dB		9.0			 8.0	
$\|S_{21E}\|^2$	Insertion Power Gain at 10 V, 50 mA, f = 1.0 GHz	dB		10.0		5.5	7.0	
h_{FE}	DC Current Gain[2] at V_{CE} = 10 V, I_C = 50 mA		40		200	40		200
I_{CBO}	Collector Cutoff Current at V_{CB} = 20 V, I_E = 0 mA	µA			5.0			5.0
I_{EBO}	Emitter Cutoff Current at V_{EB} = 2 V, I_C = 0 mA	µA			5.0			5.0
P_{1dB}	Output Power at 1 dB Compression, V_{CE} = 12.5 V, I_C = 100 mA, 2.0 GHz V_{CE} = 12.5 V, I_C = 100 mA, 1.0 GHz	dBm dBm	27.0				 27.5	
IM_3	Intermodulation Distortion, 10 V, 100 mA, F1 = 1.0 GHz, F2 = 0.99 GHz,							

Cataloage

NE46100

VCE = 5 V, IC = 50 mA

FREQUENCY	S_{11}		S_{21}		S_{12}		S_{22}		K	MAG^2
(MHz)	MAG	ANG	MAG	ANG	MAG	ANG	MAG	ANG		(dB)
100	0.778	-137	26.776	114	0.028	30	0.555	-102	0.16	29.8
200	0.815	-159	14.407	100	0.035	29	0.434	-135	0.36	26.2
500	0.826	-177	5.855	84	0.040	38	0.400	-162	0.75	21.7
800	0.827	176	3.682	76	0.052	43	0.402	-169	0.91	18.5
1000	0.826	173	2.963	71	0.058	47	0.405	-172	1.02	16.3
1200	0.825	170	2.441	66	0.064	47	0.412	-174	1.08	14.0
1400	0.820	167	2.111	61	0.069	47	0.413	-176	1.17	12.4
1600	0.828	165	1.863	57	0.078	54	0.426	-177	1.15	11.4
1800	0.827	162	1.671	53	0.087	50	0.432	-178	1.14	10.6
2000	0.828	159	1.484	49	0.093	50	0.431	-180	1.17	9.5
2500	0.822	153	1.218	39	0.11	48	0.462	177	1.18	7.8
3000	0.818	148	1.010	30	0.135	46	0.490	174	1.16	6.3
3500	0.824	142	0.876	21	0.147	44	0.507	170	1.16	5.3
4000	0.812	137	0.762	13	0.168	38	0.535	167	1.14	4.3

VCE = 5 V, IC = 100 mA

100	0.778	-144	27.669	111	0.027	35	0.523	-114	0.27	30.2
200	0.820	-164	14.559	97	0.029	29	0.445	-144	0.42	27.0
500	0.832	-179	5.885	84	0.035	38	0.435	-166	0.81	22.2
800	0.833	175	3.691	76	0.048	45	0.435	-173	0.95	18.8
1000	0.831	172	2.980	71	0.056	51	0.437	-176	1.05	16.0
1200	0.836	169	2.464	67	0.061	52	0.432	-178	1.11	14.0
1400	0.829	166	2.121	61	0.072	53	0.447	-180	1.12	12.6
1600	0.831	164	1.867	58	0.080	54	0.445	179	1.14	11.4

Cataloage

NE46100, NE46134

TYPICAL COMMON EMITTER SCATTERING PARAMETERS[1] (T_A = 25°C)

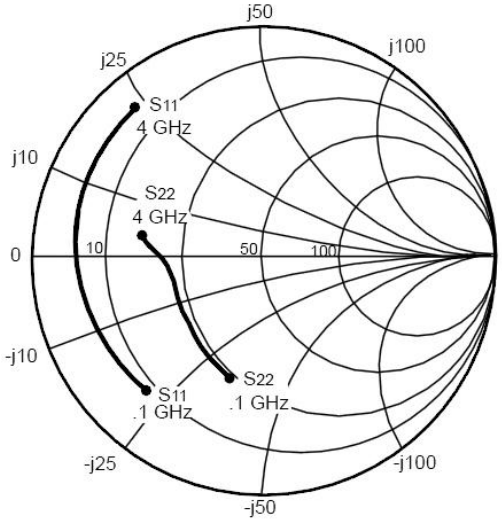

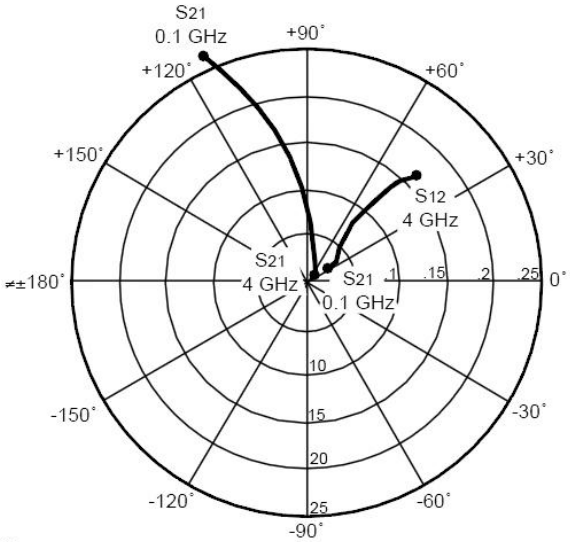

Coordinates in Ohms
Frequency in GHz
V_{CE} = 5 V, I_C = 50 mA

S2P - Touchstone

- Fisiere format Touchstone (*.s2p)

```
! SIEMENS Small Signal Semiconductors
! VDS = 3.5 V     ID = 15 mA
# GHz  S  MA  R  50
!  f        S11          S21          S12          S22
! GHz     MAG   ANG     MAG   ANG     MAG   ANG     MAG   ANG
 1.000 0.9800  -18.0   2.230  157.0  0.0240   74.0  0.6900  -15.0
 2.000 0.9500  -39.0   2.220  136.0  0.0450   57.0  0.6600  -30.0
 3.000 0.8900  -64.0   2.210  110.0  0.0680   40.0  0.6100  -45.0
 4.000 0.8200  -89.0   2.230   86.0  0.0850   23.0  0.5600  -62.0
 5.000 0.7400 -115.0   2.190   61.0  0.0990    7.0  0.4900  -80.0
 6.000 0.6500 -142.0   2.110   36.0  0.1070  -10.0  0.4100  -98.0
!
!  f      Fmin   Gammaopt  rn/50
! GHz      dB    MAG  ANG    -
 2.000     1.00  0.72   27   0.84
 4.000     1.40  0.64   61   0.58
```

Parametri S

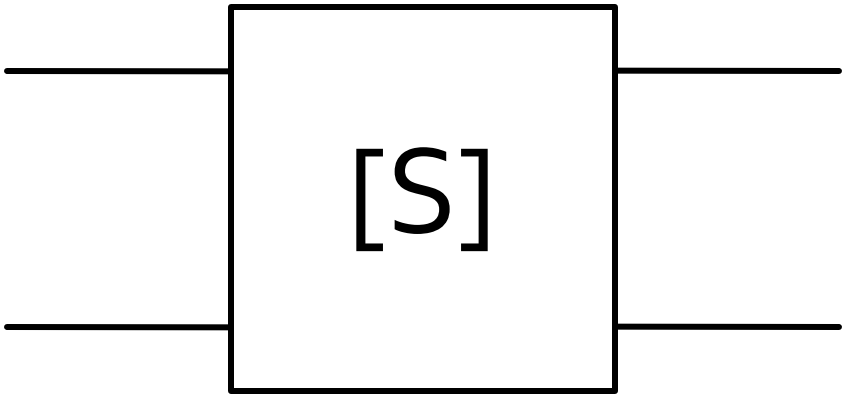

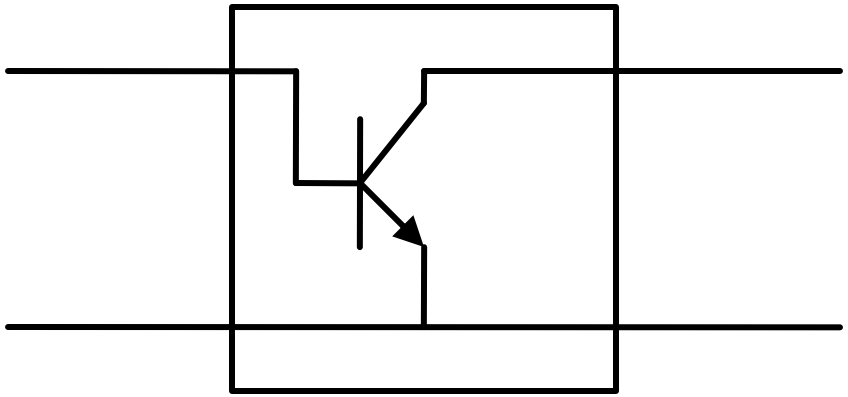

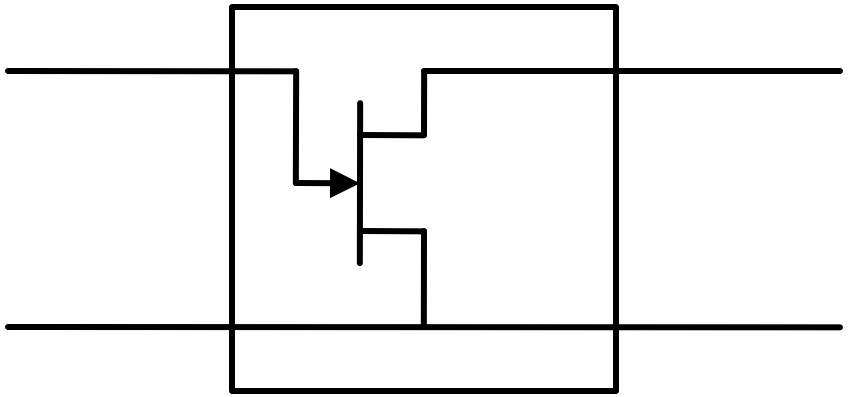

Diport amplificator

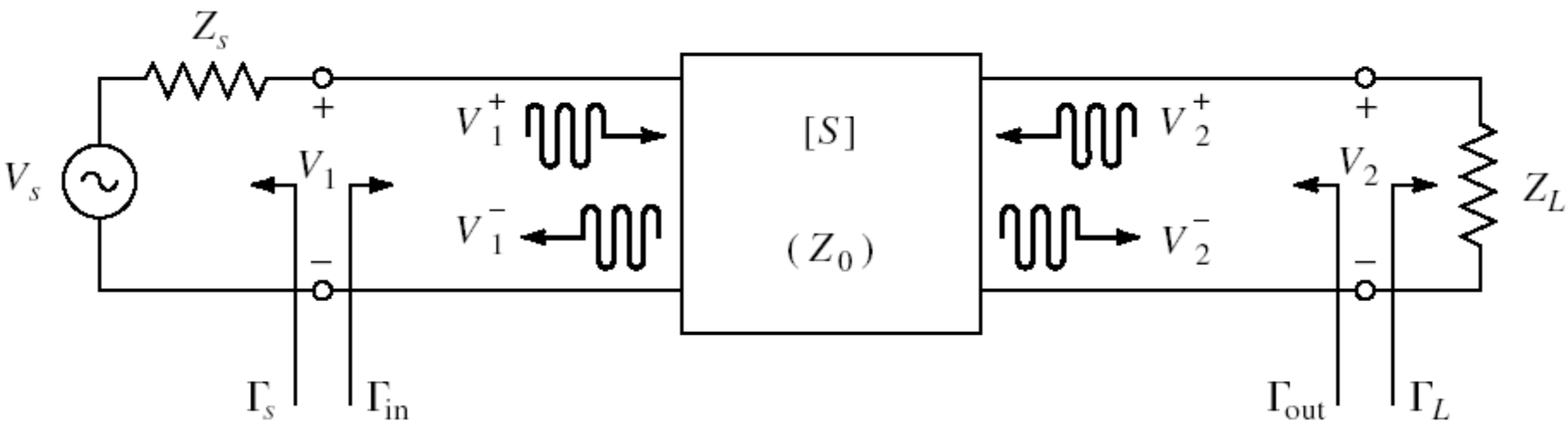

$$\Gamma_L = \frac{Z_L - Z_0}{Z_L + Z_0} \qquad \Gamma_S = \frac{Z_S - Z_0}{Z_S + Z_0} \qquad \begin{bmatrix} V_1^- \\ V_2^- \end{bmatrix} = \begin{bmatrix} S_{11} & S_{12} \\ S_{21} & S_{22} \end{bmatrix} \cdot \begin{bmatrix} V_1^+ \\ V_2^+ \end{bmatrix}$$

$$\Gamma_L = \frac{V_2^+}{V_2^-}$$

$$V_1^- = S_{11} \cdot V_1^+ + S_{12} \cdot V_2^+ = S_{11} \cdot V_1^+ + S_{12} \cdot \Gamma_L \cdot V_2^-$$

$$V_2^- = S_{21} \cdot V_1^+ + S_{22} \cdot V_2^+ = S_{21} \cdot V_1^+ + S_{22} \cdot \Gamma_L \cdot V_2^-$$

Diport amplificator

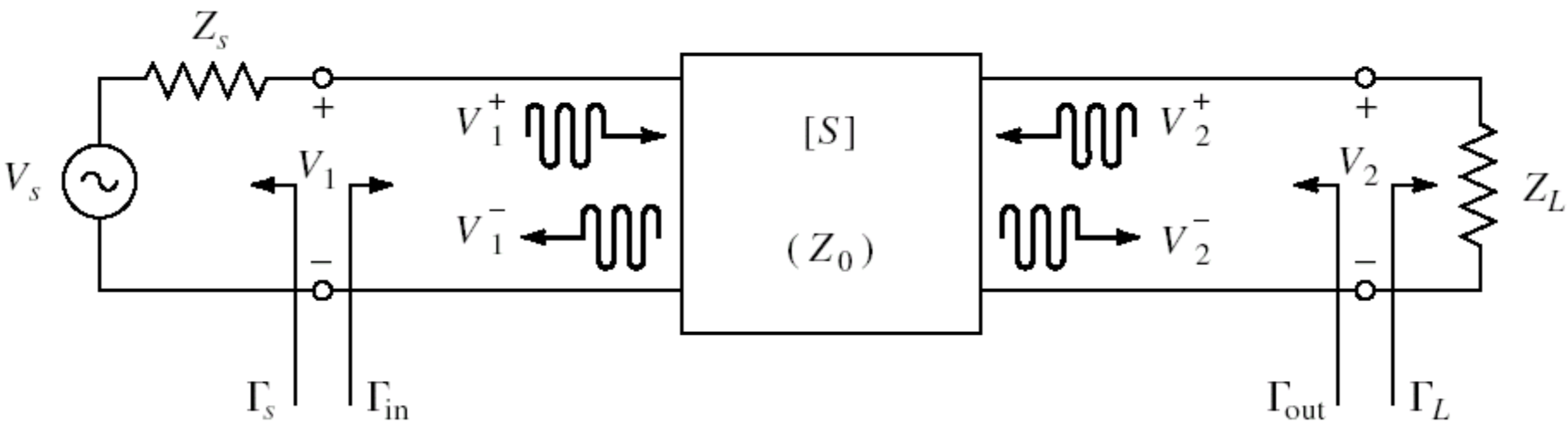

$$V_1^- = S_{11} \cdot V_1^+ + S_{12} \cdot V_2^+ = S_{11} \cdot V_1^+ + S_{12} \cdot \Gamma_L \cdot V_2^-$$

$$V_2^- = S_{21} \cdot V_1^+ + S_{22} \cdot V_2^+ = S_{21} \cdot V_1^+ + S_{22} \cdot \Gamma_L \cdot V_2^-$$

- similar

$$\Gamma_{in} = \frac{V_1^-}{V_1^+} = S_{11} + \frac{S_{12} \cdot S_{21} \cdot \Gamma_L}{1 - S_{22} \cdot \Gamma_L}$$

$$\Gamma_{out} = \frac{V_2^-}{V_2^+} = S_{22} + \frac{S_{12} \cdot S_{21} \cdot \Gamma_S}{1 - S_{11} \cdot \Gamma_S}$$

Diport amplificator

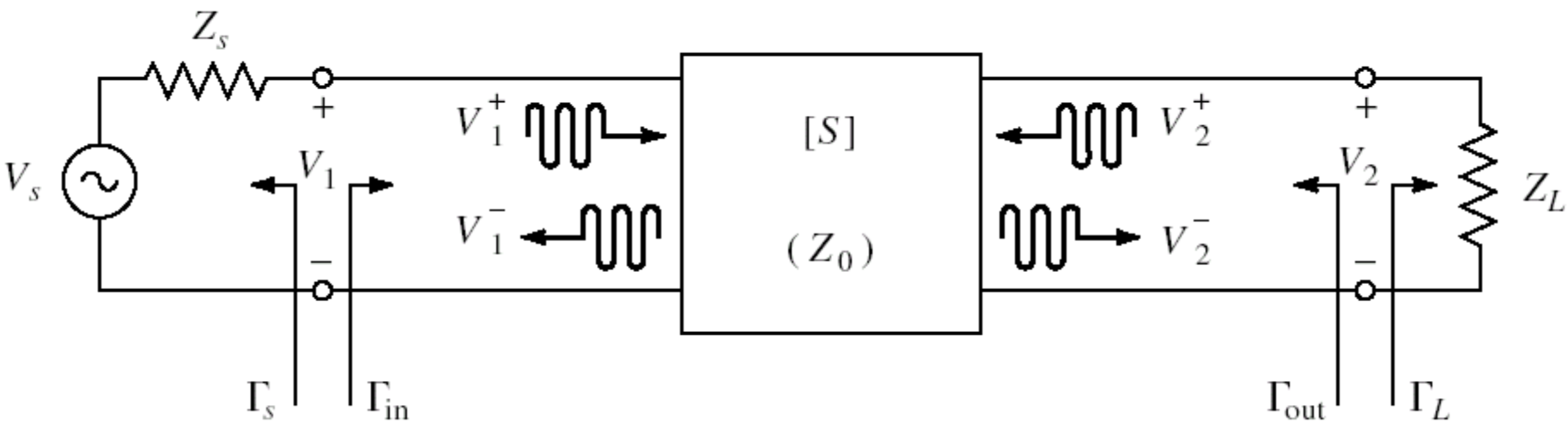

$$\Gamma_{in} = \frac{V_1^-}{V_1^+} = S_{11} + \frac{S_{12} \cdot S_{21} \cdot \Gamma_L}{1 - S_{22} \cdot \Gamma_L}$$

$$\Gamma_{out} = \frac{V_2^-}{V_2^+} = S_{22} + \frac{S_{12} \cdot S_{21} \cdot \Gamma_S}{1 - S_{11} \cdot \Gamma_S}$$

Puteri

$$\Gamma_{in} = \frac{V_1^-}{V_1^+} = S_{11} + \frac{S_{12} \cdot S_{21} \cdot \Gamma_L}{1 - S_{22} \cdot \Gamma_L}$$

$$\Gamma_{in} = \frac{Z_{in} - Z_0}{Z_{in} + Z_0}$$

$$V_1 = \frac{V_S \cdot Z_{in}}{Z_S + Z_{in}} = V_1^+ + V_1^- = V_1^+ \cdot (1 + \Gamma_{in})$$

$$V_1^+ = \frac{V_S}{2} \frac{(1 - \Gamma_S)}{(1 - \Gamma_S \cdot \Gamma_{in})}$$

- C2

$$P_{in} = \frac{1}{2 \cdot Z_0} \cdot \left|V_1^+\right|^2 \cdot \left(1 - \left|\Gamma_{in}\right|^2\right)$$

$$P_L = \frac{1}{2 \cdot Z_0} \cdot \left|V_2^-\right|^2 \cdot \left(1 - \left|\Gamma_L\right|^2\right)$$

$$P_{in} = \frac{\left|V_S\right|^2}{8 \cdot Z_0} \cdot \frac{\left|1 - \Gamma_S\right|^2}{\left|1 - \Gamma_S \cdot \Gamma_{in}\right|^2} \left(1 - \left|\Gamma_{in}\right|^2\right)$$

$$V_2^- = S_{21} \cdot V_1^+ + S_{22} \cdot V_2^+ = S_{21} \cdot V_1^+ + S_{22} \cdot \Gamma_L \cdot V_2^-$$

$$V_2^- = \frac{S_{21} \cdot V_1^+}{1 - S_{22} \cdot \Gamma_L}$$

$$P_L = \frac{\left|V_1^+\right|^2}{2 \cdot Z_0} \cdot \frac{\left|S_{21}\right|^2}{\left|1 - S_{22} \cdot \Gamma_L\right|^2} \left(1 - \left|\Gamma_L\right|^2\right)$$

$$P_L = \frac{\left|V_S\right|^2}{8 \cdot Z_0} \cdot \frac{\left|S_{21}\right|^2 \cdot \left(1 - \left|\Gamma_L\right|^2\right)}{\left|1 - S_{22} \cdot \Gamma_L\right|^2} \cdot \frac{\left|1 - \Gamma_S\right|^2}{\left|1 - \Gamma_S \cdot \Gamma_{in}\right|^2}$$

Puteri

- Puteri

$$P_{in} = \frac{|V_S|^2}{8 \cdot Z_0} \cdot \frac{|1-\Gamma_S|^2}{|1-\Gamma_S \cdot \Gamma_{in}|^2} \left(1-|\Gamma_{in}|^2\right)$$

$$P_L = \frac{|V_S|^2}{8 \cdot Z_0} \cdot \frac{|S_{21}|^2 \cdot \left(1-|\Gamma_L|^2\right)}{|1-S_{22} \cdot \Gamma_L|^2} \cdot \frac{|1-\Gamma_S|^2}{|1-\Gamma_S \cdot \Gamma_{in}|^2}$$

- Puterea disponibila de la sursa

$$P_{av\,S} = P_{in}\big|_{\Gamma_{in}=\Gamma_S^*} = \frac{|V_S|^2}{8 \cdot Z_0} \cdot \frac{|1-\Gamma_S|^2}{\left(1-|\Gamma_S|^2\right)}$$

- Puterea disponibila la sarcina

$$P_{av\,L} = P_L\big|_{\Gamma_L=\Gamma_{out}^*} = \frac{|V_S|^2}{8 \cdot Z_0} \cdot \frac{|S_{21}|^2 \cdot |1-\Gamma_S|^2}{|1-S_{11} \cdot \Gamma_S|^2 \cdot \left(1-|\Gamma_{out}|^2\right)}$$

Castig de putere

- Castigul de putere

$$G = \frac{P_L}{P_{in}} = \frac{|S_{21}|^2 \cdot \left(1 - |\Gamma_L|^2\right)}{\left(1 - |\Gamma_{in}|^2\right) \cdot |1 - S_{22} \cdot \Gamma_L|^2}$$

$$P_{in} = P_{in}\left(\Gamma_S, \Gamma_{in}(\Gamma_L), S\right)$$

$$P_L = P_L\left(\Gamma_S, \Gamma_{in}(\Gamma_L), S\right)$$

- Castigul **introdus** efectiv de amplificator este mai putin important deoarece un castig mai mare poate fi insotit de o **scadere** a puterii de intrare (absorbita efectiv de la sursa)
- Se prefera caracterizarea efectului amplificatorului prin analiza puterii **efectiv obtinuta pe sarcina** in raport cu puterea **disponibila de la sursa** (constanta)

Castig de putere

- Castigul de putere **disponibil**

$$G_A = \frac{P_{av\,L}}{P_{av\,S}} = \frac{|S_{21}|^2 \cdot \left(1-|\Gamma_S|^2\right)}{|1-S_{22}\cdot\Gamma_L|^2 \cdot \left(1-|\Gamma_{out}|^2\right)}$$

- Castigul de putere de **transfer** (transducer power gain)

$$G_T = \frac{P_L}{P_{av\,S}} = \frac{|S_{21}|^2 \cdot \left(1-|\Gamma_S|^2\right)\cdot\left(1-|\Gamma_L|^2\right)}{|1-\Gamma_S\cdot\Gamma_{in}|^2 \cdot |1-S_{22}\cdot\Gamma_L|^2}$$

$$\Gamma_{in} = \Gamma_{in}(\Gamma_L)$$

- Castigul de putere de **transfer unilateral**

$$G_{TU} = |S_{21}|^2 \cdot \frac{1-|\Gamma_S|^2}{|1-S_{11}\cdot\Gamma_S|^2} \cdot \frac{1-|\Gamma_L|^2}{|1-S_{22}\cdot\Gamma_L|^2}$$

$$S_{12} \cong 0 \qquad \Gamma_{in} = S_{11}$$

Permite tratarea separata a intrarii si iesirii

Cuadripol Amplificator

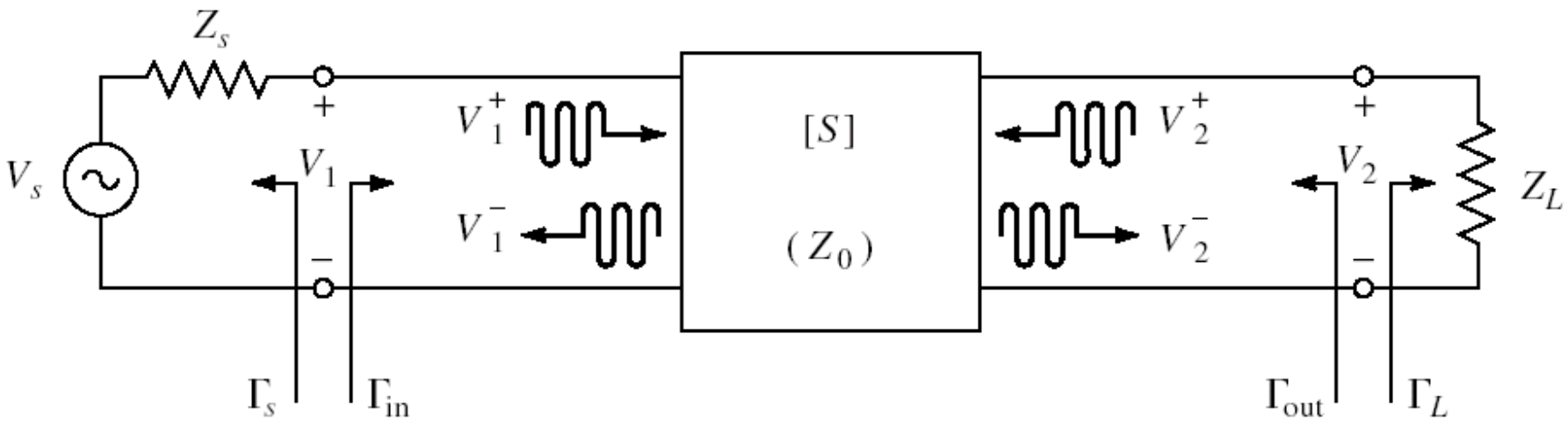

- marimi care intereseaza:
  - stabilitate
  - castig de putere
  - zgomot (uneori – semnal mic)
  - liniaritate (uneori – semnal mare)

Stabilitate

Amplificatoare de microunde

Cuadripol Amplificator

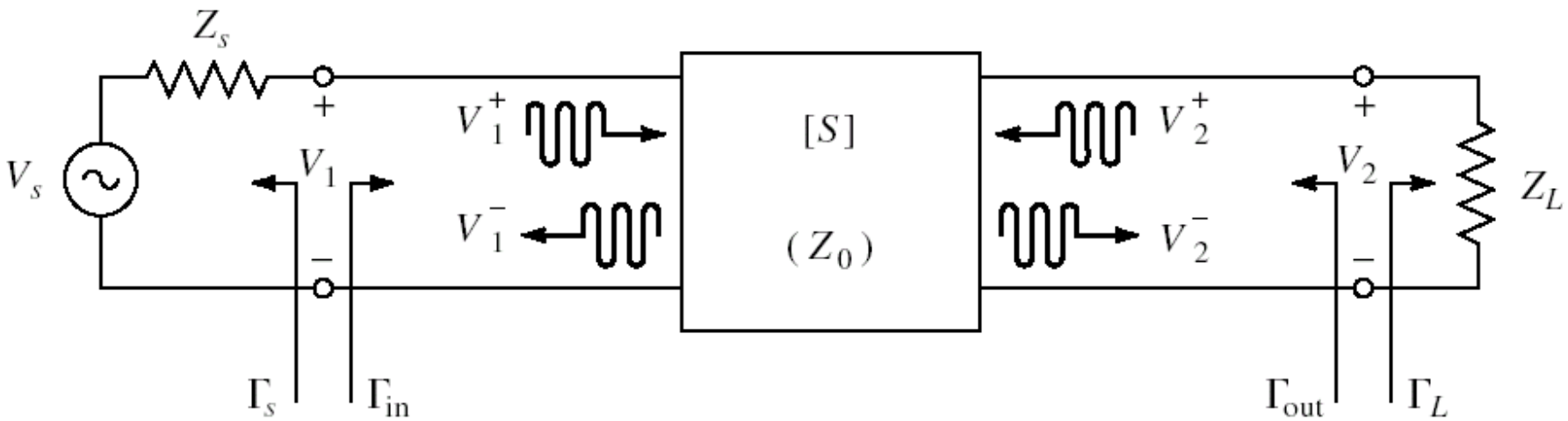

- marimi care intereseaza:
  - **stabilitate**
  - castig de putere
  - zgomot (uneori – semnal mic)
  - liniaritate (uneori – semnal mare)

Stabilitate

- C5 $\Gamma = \Gamma_r + j \cdot \Gamma_i$ $r_L = \dfrac{1-\Gamma_r^2-\Gamma_i^2}{(1-\Gamma_r)^2+\Gamma_i^2}$

  Z_{in} $\Gamma_{in} = \Gamma_r + j \cdot \Gamma_i$

- instabilitate

  $\mathrm{Re}\{Z_{in}\} < 0 \quad \Leftrightarrow \quad 1-\Gamma_r^2-\Gamma_i^2 < 0$ $|\Gamma_{in}| > 1$

- stabilitate, Z_{in}
  - conditii ce trebuie indeplinite de Γ_L pentru a obtine stabilitatea (la intrare)

  $|\Gamma_{in}| < 1$ $\left| S_{11} + \dfrac{S_{12} \cdot S_{21} \cdot \Gamma_L}{1 - S_{22} \cdot \Gamma_L} \right| < 1$

- similar Z_{out}
  - conditii ce trebuie indeplinite de Γ_S pentru a obtine stabilitatea (la iesire)

Stabilitate

$$|\Gamma_{in}| < 1 \qquad \left| S_{11} + \frac{S_{12} \cdot S_{21} \cdot \Gamma_L}{1 - S_{22} \cdot \Gamma_L} \right| < 1$$

- Obtinem conditiile ce trebuie indeplinite de Γ_L pentru a obtine stabilitatea

$$|\Gamma_{out}| < 1 \qquad \left| S_{22} + \frac{S_{12} \cdot S_{21} \cdot \Gamma_S}{1 - S_{11} \cdot \Gamma_S} \right| < 1$$

- Obtinem conditiile ce trebuie indeplinite de Γ_S pentru a obtine stabilitatea

Stabilitate

$$|\Gamma_{in}| < 1 \qquad \left| S_{11} + \frac{S_{12} \cdot S_{21} \cdot \Gamma_L}{1 - S_{22} \cdot \Gamma_L} \right| < 1$$

- Limita de stabilitate/instabilitate

$$|\Gamma_{in}| = 1 \qquad \left| S_{11} + \frac{S_{12} \cdot S_{21} \cdot \Gamma_L}{1 - S_{22} \cdot \Gamma_L} \right| = 1$$

$$\left| S_{11} \cdot (1 - S_{22} \cdot \Gamma_L) + S_{12} \cdot S_{21} \cdot \Gamma_L \right| = \left| 1 - S_{22} \cdot \Gamma_L \right|$$

- Determinantul matricii S $\quad \Delta = S_{11} \cdot S_{22} - S_{12} \cdot S_{21}$

$$\left| S_{11} - \Delta \cdot \Gamma_L \right| = \left| 1 - S_{22} \cdot \Gamma_L \right|$$

$$\left| S_{11} - \Delta \cdot \Gamma_L \right|^2 = \left| 1 - S_{22} \cdot \Gamma_L \right|^2$$

Stabilitate

$$\left|S_{11}-\Delta\cdot\Gamma_L\right|^2=\left|1-S_{22}\cdot\Gamma_L\right|^2$$

$$a\cdot a^*=|a|\cdot e^{j\theta}\cdot|a|\cdot e^{-j\theta}=|a|^2$$

$$|a+b|^2=(a+b)\cdot(a+b)^*=(a+b)\cdot\left(a^*+b^*\right)=\underline{|a|^2}+|b|^2+\underline{a^*\cdot b}+\underline{a\cdot b^*}$$

$$|S_{11}|^2+|\Delta|^2\cdot|\Gamma_L|^2-\left(\Delta\cdot\Gamma_L\cdot S_{11}^*+\Delta^*\cdot\Gamma_L^*\cdot S_{11}\right)=1+|S_{22}|^2\cdot|\Gamma_L|^2-\left(S_{22}^*\cdot\Gamma_L^*+S_{22}\cdot\Gamma_L\right)$$

$$\left(|S_{22}|^2-|\Delta|^2\right)\cdot\Gamma_L\cdot\Gamma_L^*-\left(S_{22}-\Delta\cdot S_{11}^*\right)\cdot\Gamma_L-\left(S_{22}^*-\Delta^*\cdot S_{11}\right)\cdot\Gamma_L^*=|S_{11}|^2-1$$

$$\Gamma_L\cdot\Gamma_L^*-\frac{\left(S_{22}-\Delta\cdot S_{11}^*\right)\cdot\Gamma_L+\left(S_{22}^*-\Delta^*\cdot S_{11}\right)\cdot\Gamma_L^*}{|S_{22}|^2-|\Delta|^2}=\frac{|S_{11}|^2-1}{|S_{22}|^2-|\Delta|^2}\qquad+\frac{\left|S_{22}-\Delta\cdot S_{11}^*\right|^2}{\left(|S_{22}|^2-|\Delta|^2\right)^2}$$

$$\left|\Gamma_L-\frac{\left(S_{22}-\Delta\cdot S_{11}^*\right)^*}{|S_{22}|^2-|\Delta|^2}\right|^2=\frac{|S_{11}|^2-1}{|S_{22}|^2-|\Delta|^2}+\frac{\left|S_{22}-\Delta\cdot S_{11}^*\right|^2}{\left(|S_{22}|^2-|\Delta|^2\right)^2}$$

Stabilitate

$$\left|\Gamma_L - \frac{\left(S_{22} - \Delta \cdot S_{11}^*\right)^*}{\left|S_{22}\right|^2 - \left|\Delta\right|^2}\right| = \left|\frac{S_{12} \cdot S_{21}}{\left|S_{22}\right|^2 - \left|\Delta\right|^2}\right|$$

$$\left|\Gamma - \Gamma_0\right| = R$$

$$(x - x_0)^2 + (y - y_0)^2 = R^2$$

$$\left|\Gamma - \Gamma_0\right| = R$$

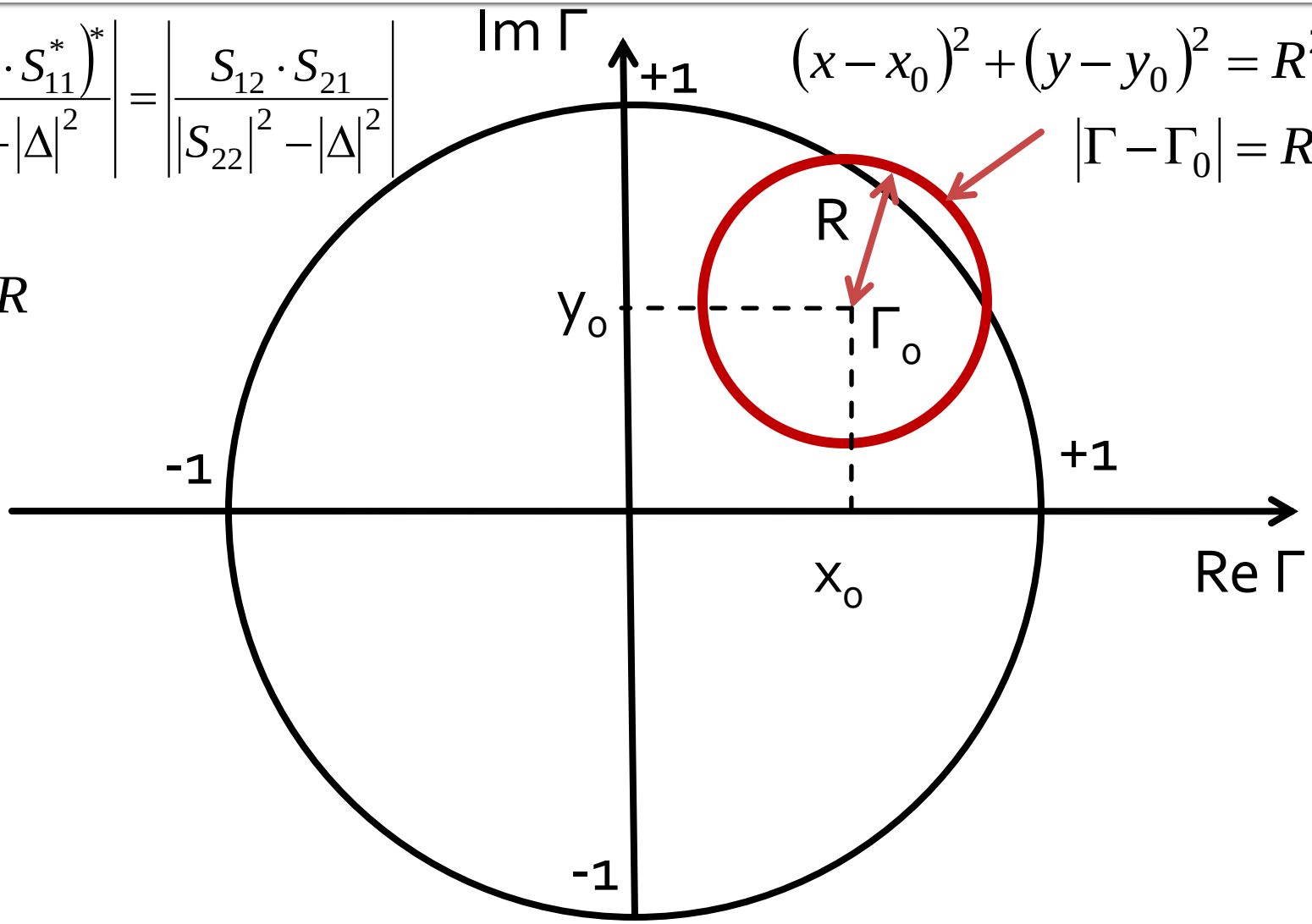

Cerc de stabilitate la iesire (CSOUT)

$$\left|\Gamma_L - \frac{\left(S_{22} - \Delta \cdot S_{11}^*\right)^*}{|S_{22}|^2 - |\Delta|^2}\right| = \left|\frac{S_{12} \cdot S_{21}}{|S_{22}|^2 - |\Delta|^2}\right| \qquad |\Gamma_L - C_L| = R_L$$

- Ecuatia unui cerc, care reprezinta locul geometric al punctelor Γ_L pentru **limita** de stabilitate
- Cercul se numeste **cerc de stabilitate la iesire** (Γ_L)

$$C_L = \frac{\left(S_{22} - \Delta \cdot S_{11}^*\right)^*}{|S_{22}|^2 - |\Delta|^2} \qquad R_L = \frac{|S_{12} \cdot S_{21}|}{\left||S_{22}|^2 - |\Delta|^2\right|}$$

Cerc de stabilitate la intrare (CSIN)

- Similar

$$\left|\Gamma_{out}\right| = 1 \qquad \left| S_{22} + \frac{S_{12} \cdot S_{21} \cdot \Gamma_S}{1 - S_{11} \cdot \Gamma_S} \right| = 1$$

- Ecuatia unui cerc, care reprezinta locul geometric al punctelor Γ_S pentru **limita** de stabilitate
- Cercul se numeste **cerc de stabilitate la intrare** (Γ_S)

$$C_S = \frac{\left(S_{11} - \Delta \cdot S_{22}^*\right)^*}{\left|S_{11}\right|^2 - \left|\Delta\right|^2} \qquad R_S = \frac{\left|S_{12} \cdot S_{21}\right|}{\left|\left|S_{11}\right|^2 - \left|\Delta\right|^2\right|}$$

Cerc de stabilitate la iesire (CSOUT)

- **Cercul de stabilitate la iesire** reprezinta locul geometric al punctelor Γ_L pentru **limita** de stabilitate ($|\Gamma_{in}|=1$)
- Cercul imparte planul complex in doua suprafete, **interiorul** si **exteriorul** cercului
- Cele doua suprafete vor reprezenta zonele Γ_L de stabilitate ($|\Gamma_{in}|<1$) / instabilitate ($|\Gamma_{in}|>1$)

Cerc de stabilitate la iesire (CSOUT)

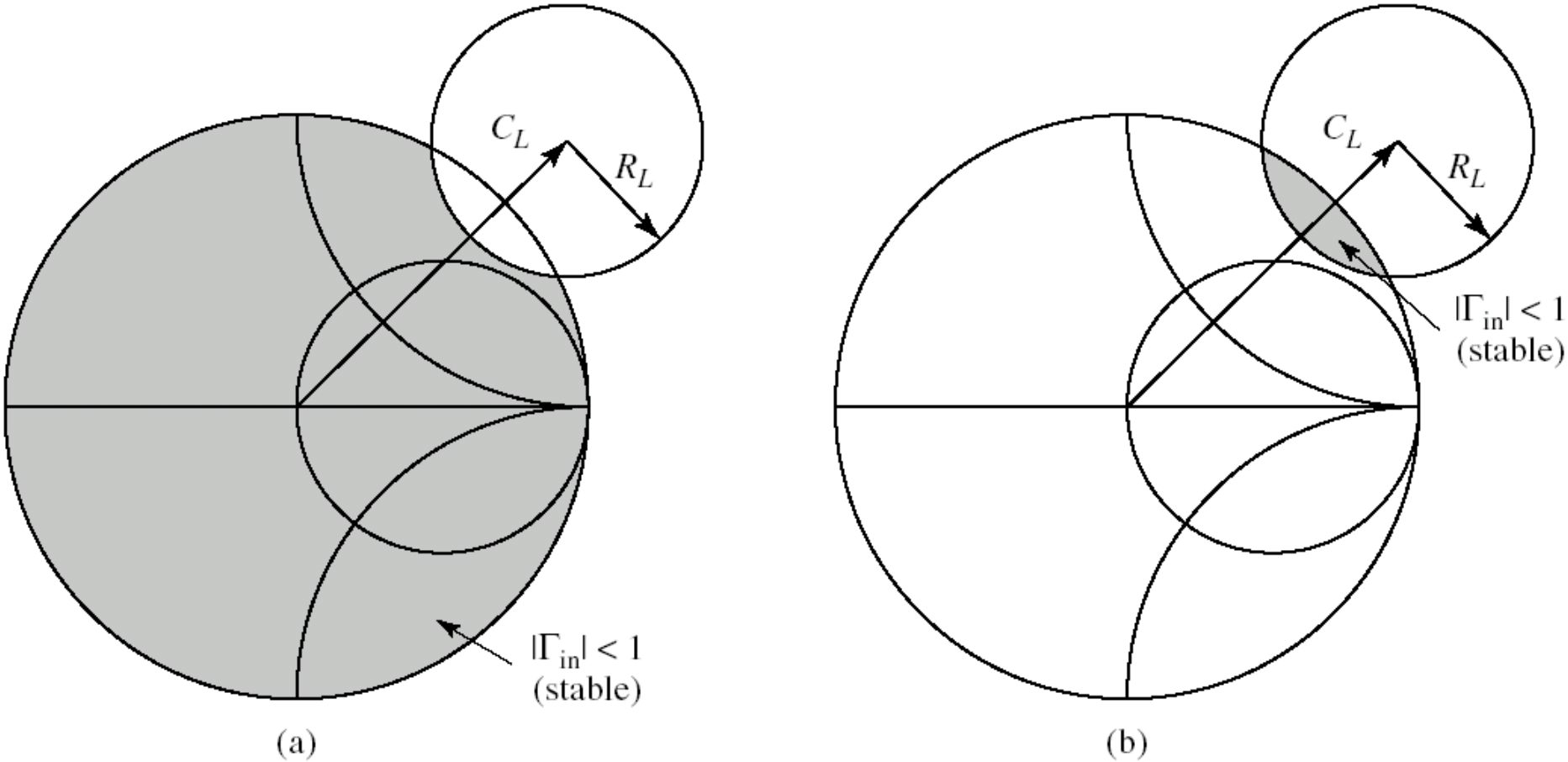

- Doua cazuri: (a) exterior stabil / (b) interior stabil

Cerc de stabilitate la iesire (CSOUT)

- Identificarea zonelor de stabilitate / instabilitate
  - Centrul diagramei Smith: in coordonate polare corespunde lui $\Gamma_L = 0$
  - Coeficientul de reflexie la intrare

$$\Gamma_{in} = S_{11} + \frac{S_{12} \cdot S_{21} \cdot \Gamma_L}{1 - S_{22} \cdot \Gamma_L} \qquad \Gamma_{in}\big|_{\Gamma_L = 0} = S_{11} \qquad \left|\Gamma_{in}\right|_{\Gamma_L = 0} = \left|S_{11}\right|$$

  - Decizia se poate lua in functie de valoarea pe care o are |S11| si de pozitia centrului diagramei Smith fata de cercul de stabilitate

Identificarea zonelor

- Cerc de stabilitate la iesire
  - **$|S_{11}| < 1$** → centrul diagramei pe care se reprezinta Γ_L este punct **stabil**, se gaseste in zona stabila (cel mai des)
  - $|S_{11}| > 1$ → centrul diagramei pe care se reprezinta Γ_L este punct **instabil**, se gaseste in zona instabila
- Cerc de stabilitate la intrare
  - **$|S_{22}| < 1$** → centrul diagramei pe care se reprezinta Γ_S este punct **stabil**, se gaseste in zona stabila (cel mai des)
  - $|S_{22}| > 1$ → centrul diagramei pe care se reprezinta Γ_S este punct **instabil**, se gaseste in zona instabila

Exemplu

- ATF-34143 **at Vds=3V Id=20mA.**
- @5GHz
  - S11 = 0.64∠139°
  - S12 = 0.119∠-21°
  - S21 = 3.165 ∠16°
  - S22 = 0.22 ∠146°

```
!ATF-34143
!S-PARAMETERS at Vds=3V  Id=20mA.   LAST UPDATED 01-29-99

# ghz s ma r 50

2.0  0.75  -126  6.306  90  0.088  23  0.26  -120
2.5  0.72  -145  5.438  75  0.095  15  0.25  -140
3.0  0.69  -162  4.762  62  0.102  7  0.23  -156
4.0  0.65  166  3.806  38  0.111  -8  0.22  174
5.0  0.64  139  3.165  16  0.119  -21  0.22  146
6.0  0.65  114  2.706  -5  0.125  -35  0.23  118
7.0  0.66  89  2.326  -27  0.129  -49  0.25  91
8.0  0.69  67  2.017  -47  0.133  -62  0.29  67
9.0  0.72  48  1.758  -66  0.135  -75  0.34  46

!FREQ   Fopt    GAMMA OPT      RN/Zo
!GHZ    dB     MAG     ANG     -

2.0  0.19  0.71  66  0.09
2.5  0.23  0.65  83  0.07
3.0  0.29  0.59  102  0.06
4.0  0.42  0.51  138  0.03
5.0  0.54  0.45  174  0.03
6.0  0.67  0.42  -151  0.05
7.0  0.79  0.42  -118  0.10
8.0  0.92  0.45  -88  0.18
9.0  1.04  0.51  -63  0.30
10.0  1.16  0.61  -43  0.46
```

Example

- ATF-34143
- **at**
  - **Vds=3V**
  - **Id=20mA**.

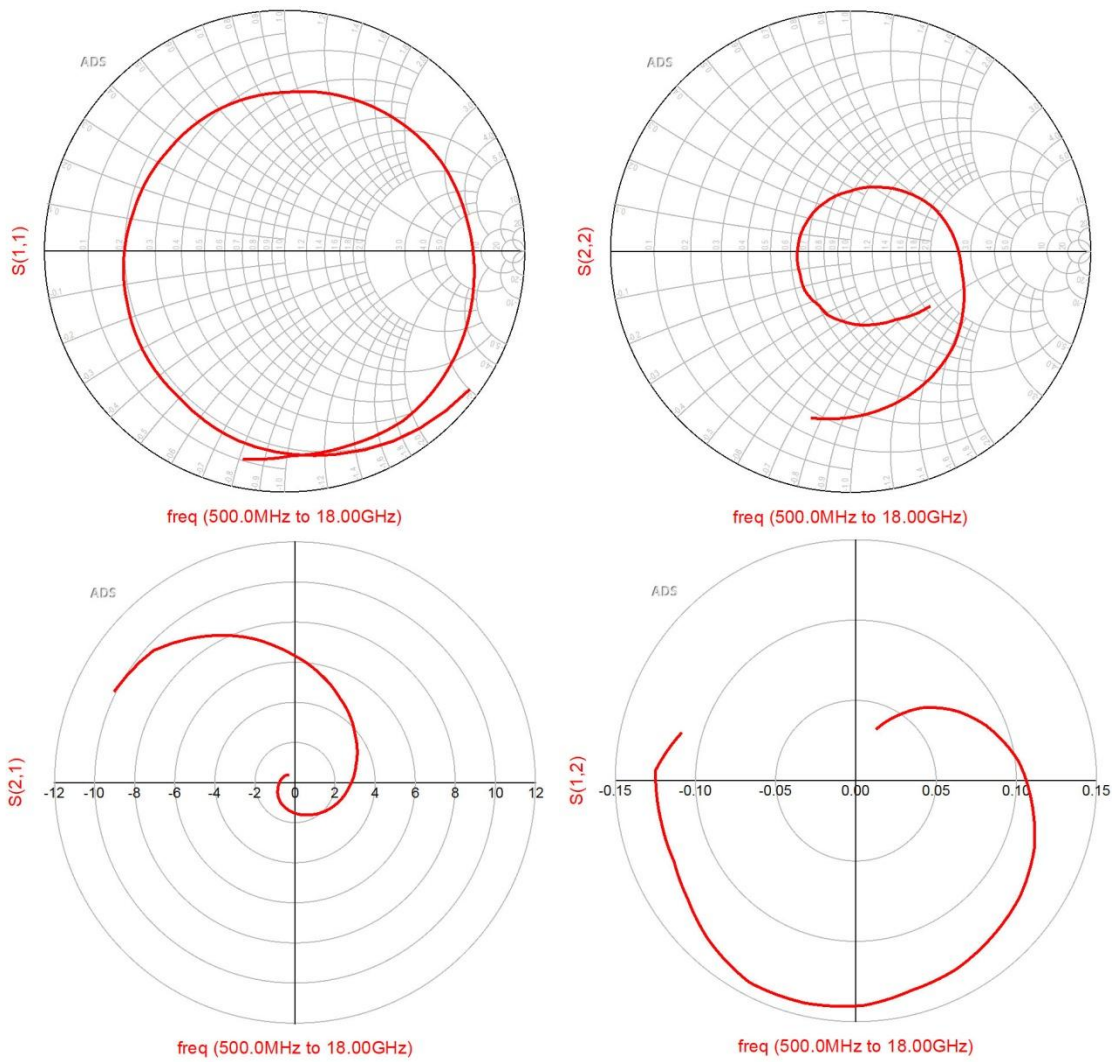

Calcul + identificare zone

- Parametri S
  - S11 = -0.483+0.42·j
  - S12 = 0.111-0.043·j
  - S21 = 3.042+0.872·j
  - S22 = -0.182+0.123·j
- | S22 | < 1
- $|C_L| < R_L$ o∈CSOUT

$$C_L = \frac{\left(S_{22} - \Delta \cdot S_{11}^*\right)^*}{|S_{22}|^2 - |\Delta|^2} = 3.931 - 0.897 \cdot j$$

$$|C_L| = 4.032$$

$$R_L = \frac{|S_{12} \cdot S_{21}|}{\left||S_{22}|^2 - |\Delta|^2\right|} = 4.891$$

- Centrul diagramei Smith este in interiorul cercului de stabilitate (o∈CSOUT) si apartine zonei stabile
  - interior cerc – stabil
  - exterior cerc – instabil

Calcul + identificare zone

- Parametri S
  - S11 = -0.483+0.42·j
  - S12 = 0.111-0.043·j
  - S21 = 3.042+0.872·j
  - S22 = -0.182+0.123·j
- | S11 | < 1
- $|C_S| > R_S$ $0 \notin$ CSIN
- Centrul diagramei Smith este in exteriorul cercului de stabilitate ($0 \notin$ CSIN) si apartine zonei stabile
  - exterior cerc – stabil
  - interior cerc – instabil

$$C_S = \frac{\left(S_{11} - \Delta \cdot S_{22}^*\right)^*}{|S_{11}|^2 - |\Delta|^2} = -1.871 - 1.265 \cdot j$$

$$|C_S| = 2.259$$

$$R_S = \frac{|S_{12} \cdot S_{21}|}{\left||S_{11}|^2 - |\Delta|^2\right|} = 1.325$$

ADS

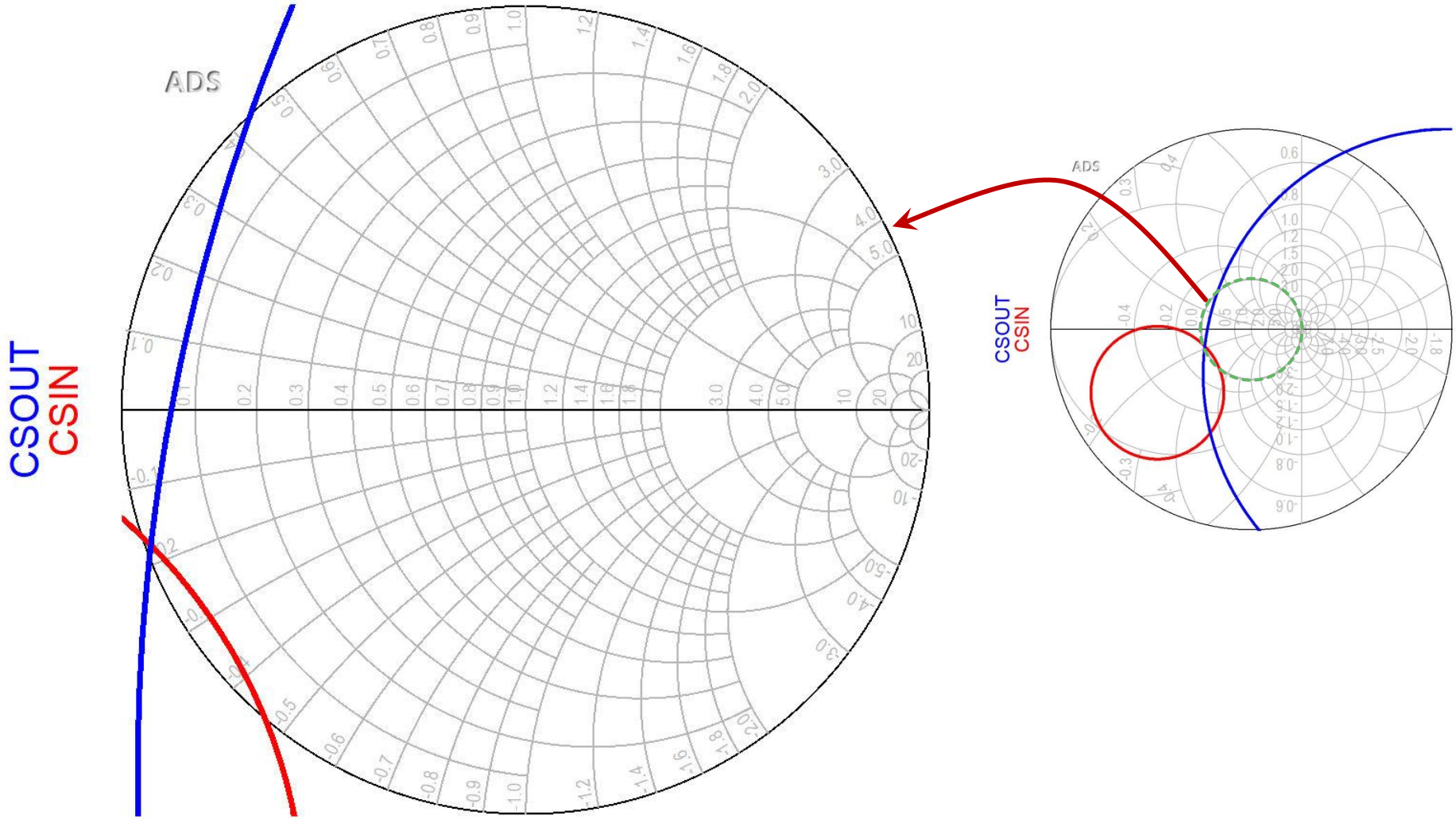

Reprezentare 3D $|\Gamma_{in}|$, $|\Gamma_{out}|$

- Variatii foarte mari ->logaritmic

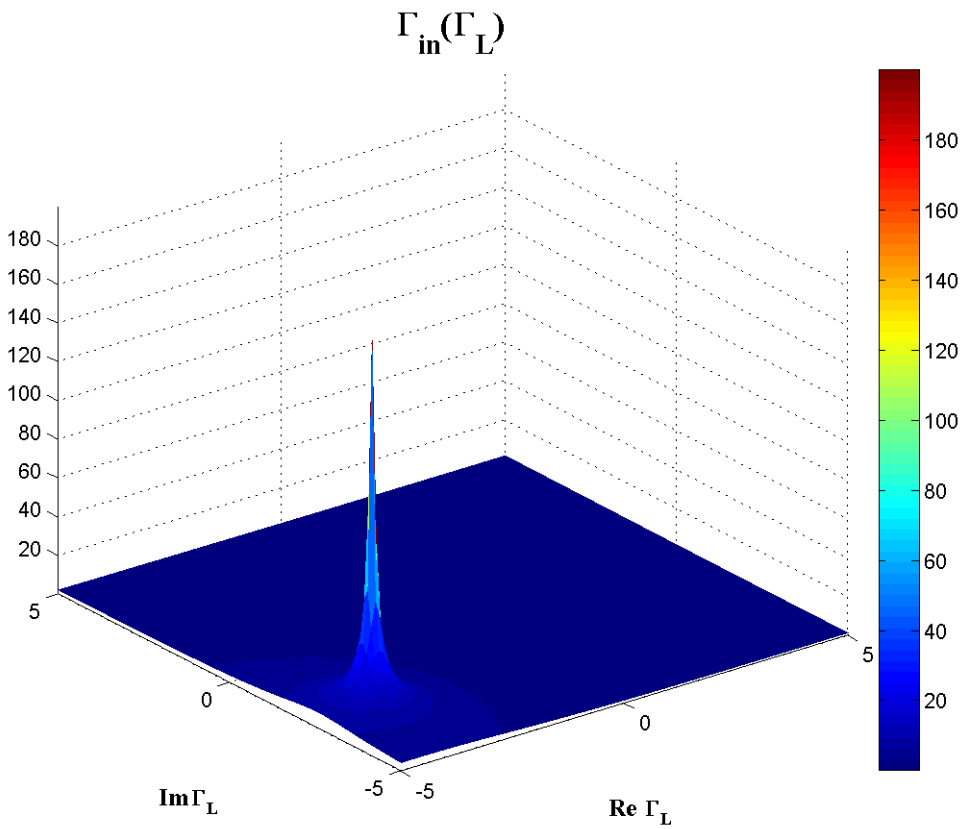

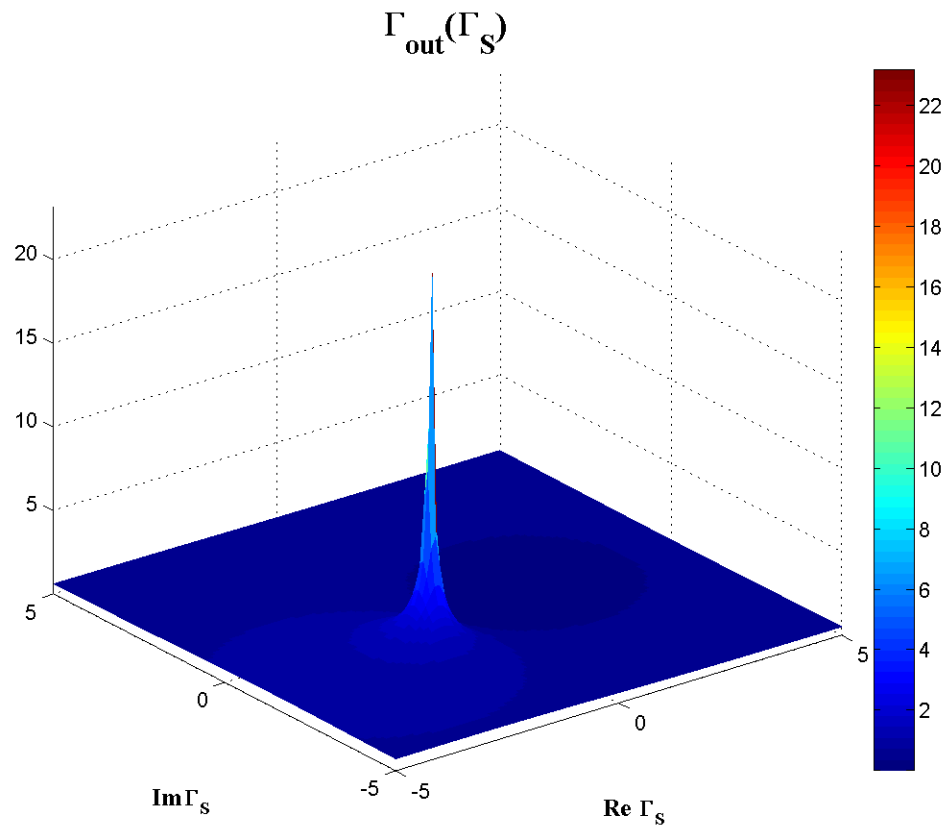

Reprezentare 3D $|\Gamma_{in}|$, $|\Gamma_{out}|$

- $\log_{10}|\Gamma_{in}|$, $\log_{10}|\Gamma_{out}|$

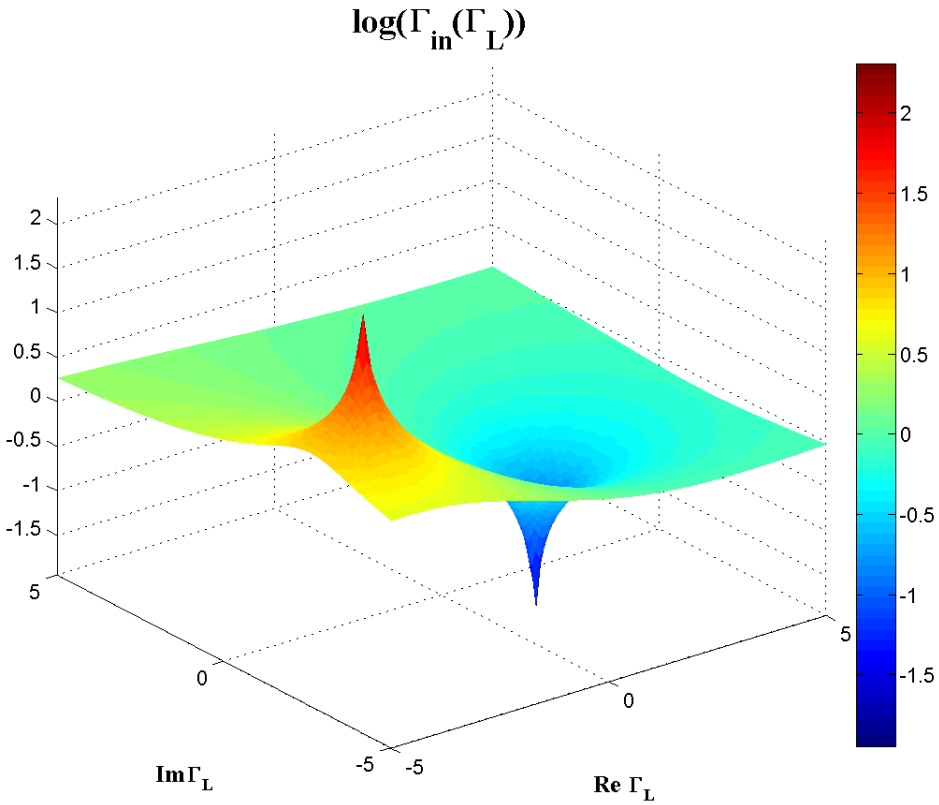

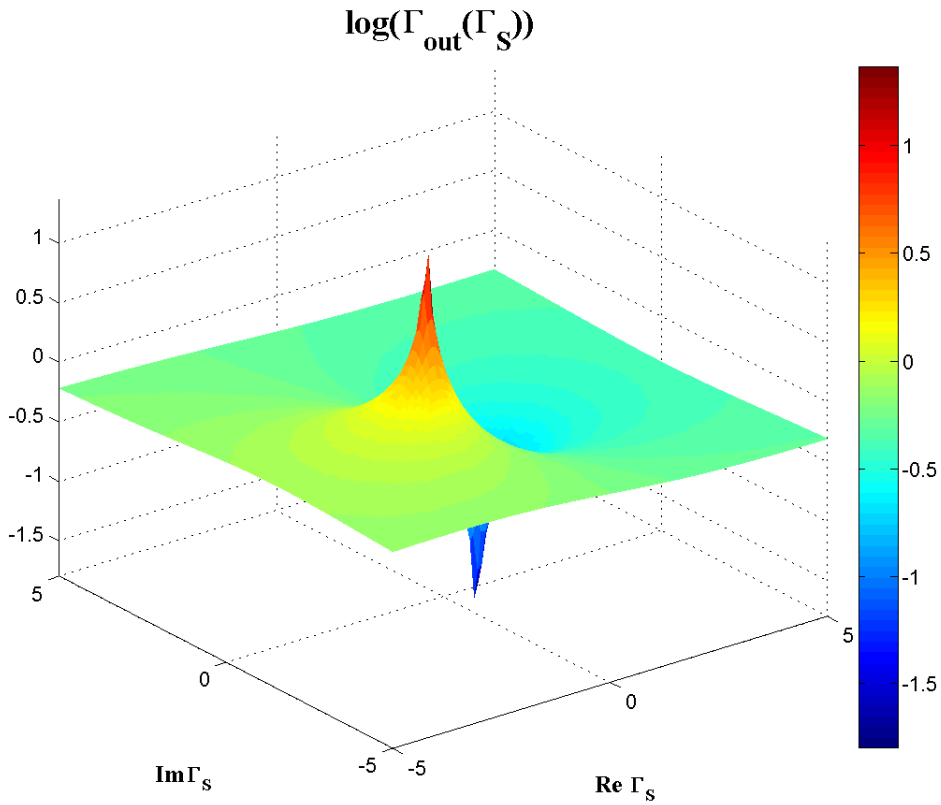

Reprezentare 3D $|\Gamma_{in}|$, $|\Gamma_{out}|$, $|\Gamma|=1$

- $|\Gamma| = 1 \rightarrow \log_{10}|\Gamma| = 0$, intersectia = cerc

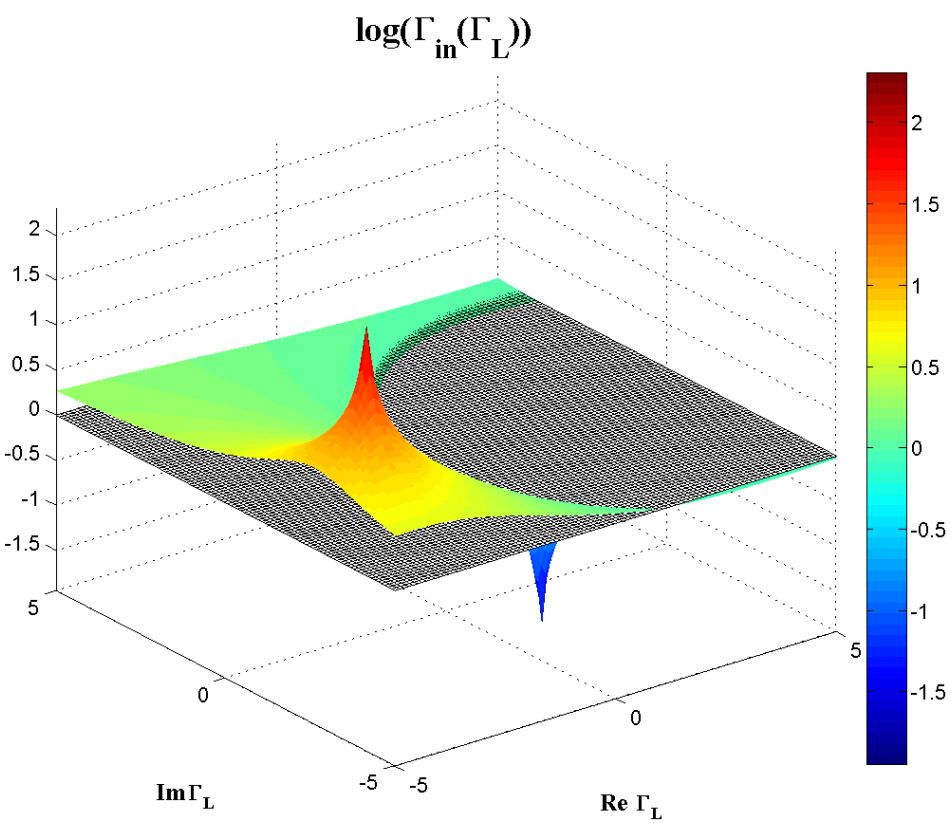

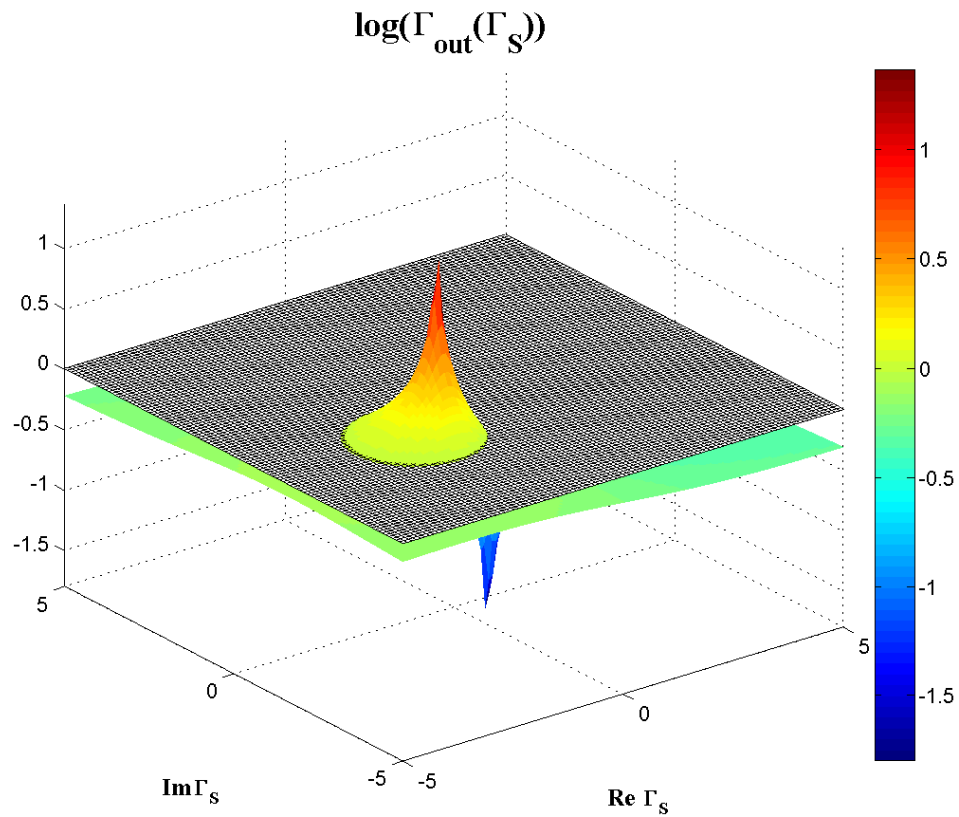

Contour map/lines

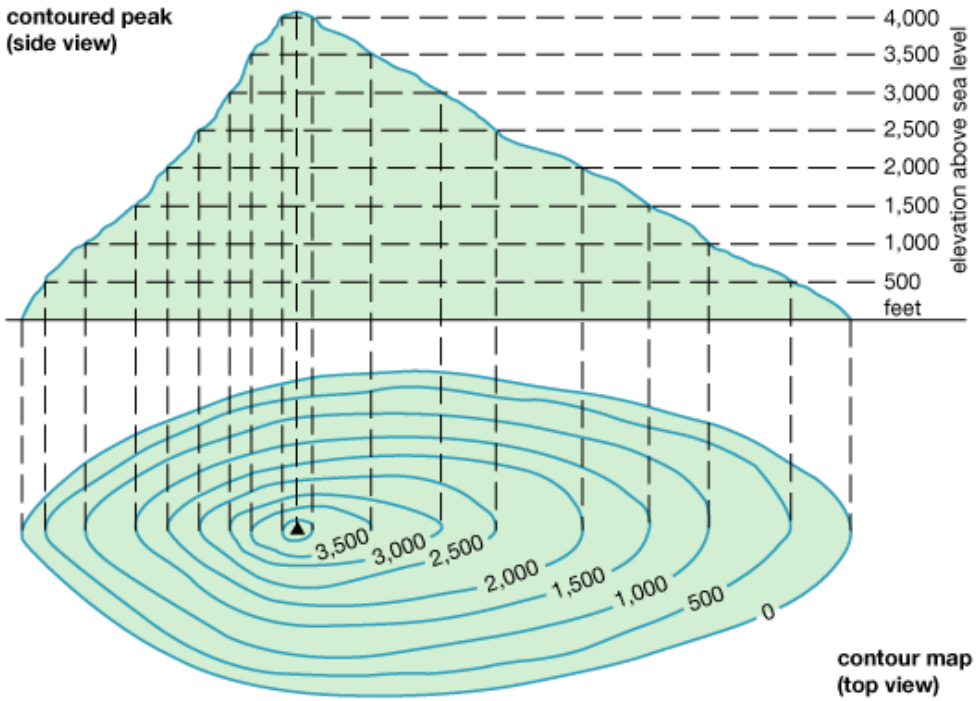

© 2011 Encyclopædia Britannica, Inc.

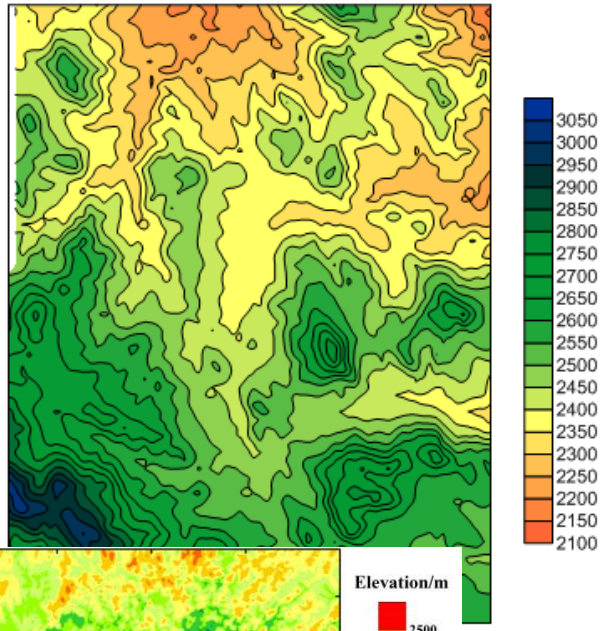

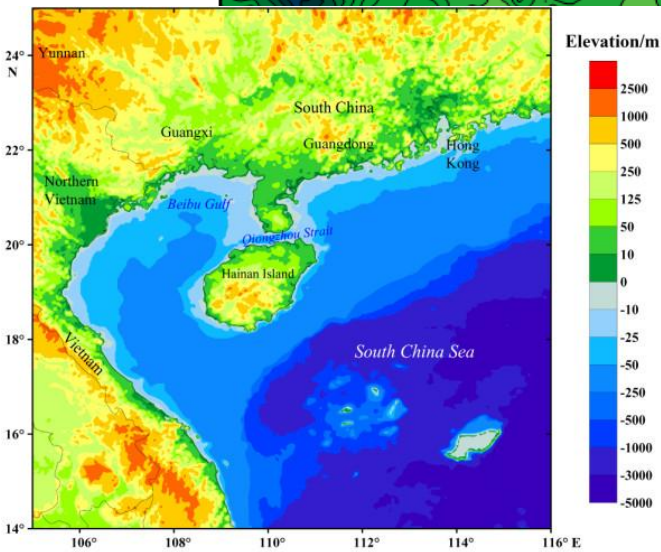

Reprezentare 3D $|\Gamma_{in}|$, $|\Gamma_{out}|$

- $\log_{10}|\Gamma_{in}| = 0$, Γ_L, CSOUT

$\log_{10}|\Gamma_{in}| = 0$,
$|\Gamma_{in}| = 1$

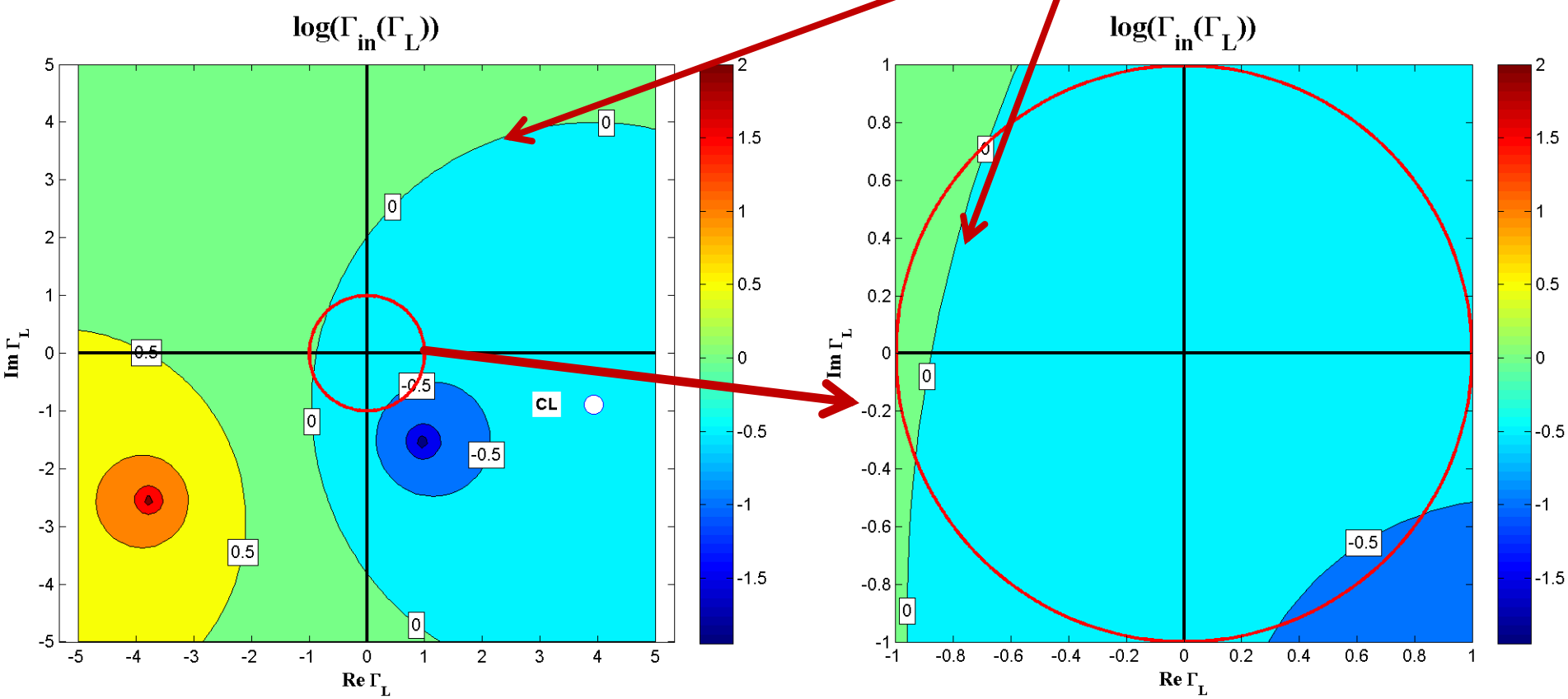

Reprezentare 3D $|\Gamma_{in}|$, $|\Gamma_{out}|$

- $\log_{10}|\Gamma_{out}| = 0$, Γ_S, CSIN

$\log_{10}|\Gamma_{out}| = 0$,
$|\Gamma_{out}| = 1$

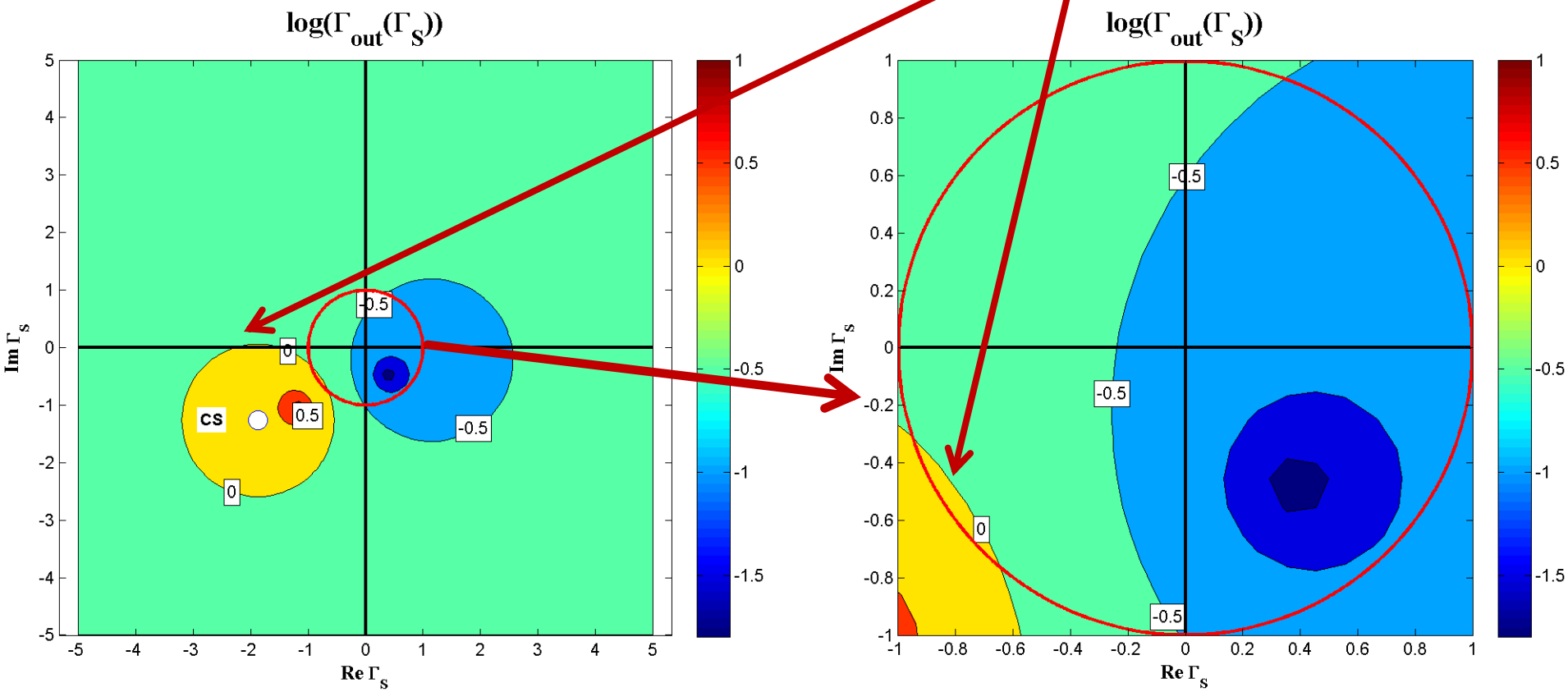

CSIN, CSOUT

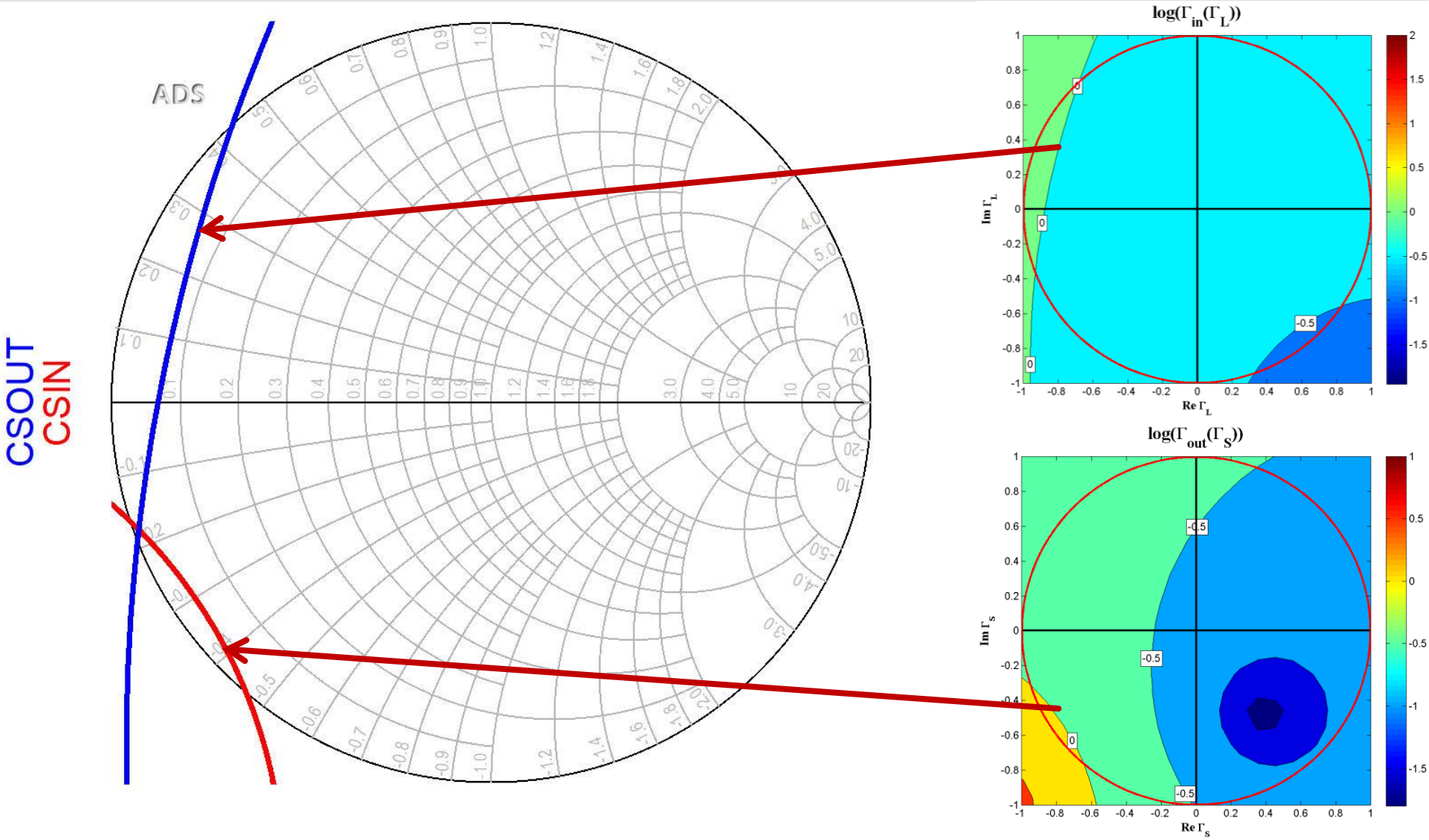

Contact

- Laboratorul de microunde si optoelectronica
- http://rf-opto.etti.tuiasi.ro
- rdamian@etti.tuiasi.ro